B
15

PRICE 5/-

THE SPARE PARTS LIST FOR

THE

MG

1½-LITRE

(VA Type)

THE
Spare Parts List
for the

1½-Litre
(VA Type)

Foreword.

The Spare Parts List has been compiled and illustrated to assist as far as possible the correct ordering of replacement parts, and it will be found that the reference numbers on the illustrations correspond with those in the left-hand columns of the spares list.

When ordering replacements it is of the greatest assistance to our Service Department if the part required is given its correct reference number and description, and the chassis, engine and body numbers should be quoted in all correspondence as well as on the order itself, as delay and misinterpretation of orders are thus avoided.

We would also draw your attention to the fact that you will get quicker service if you place all your orders with our Distributors in your territory, who are holding very adequate stocks of M.G. Spares.

The name and address of the nearest Distributors is given in the Instruction Manual supplied with the car, and we feel sure that all your requirements will receive every consideration and attention.

May we request you therefore to get into touch with our Distributors for all your future orders?

We cannot stress too highly the *danger* of fitting non-genuine parts to M.G. cars.

Unfortunately cases have come to our notice where accidents have actually been caused by this practice, and we strongly advise all M.G. owners to insist and see that for all repairs and replacements only genuine M.G. parts are fitted.

M.G. parts are specially designed and manufactured to withstand the stresses imposed by a high-speed sports car, and we would warn all owners that the fitting of non-genuine parts renders the guarantee *null* and *void*.

The Company only fit the highest grade and best known proprietary fitments, but we give no guarantee whatsoever in respect of tyres, lamps, electrical equipment, speedometers, clocks, or any other proprietary fittings of any type supplied with the car or otherwise, as such proprietary fittings are usually covered by a guarantee issued by their respective manufacturers.

All questions involving the replacement or repair of any such proprietary fittings should therefore be taken up direct with the manufacturers concerned, and not with The M.G. Car Company Ltd. (See list overleaf.)

G.K. — G.T.

November, 1937.
Revised July, 1939.

TELEGRAMS:
"EMGEE"
ABINGDON

THE M.G. CAR COMPANY LTD
ABINGDON-ON-THAMES
BERKSHIRE

TELEPHONE:
251 (4 LINES)
ABINGDON-ON-THAMES

SPECIAL NOTE REGARDING PROPRIETARY FITTINGS

All claims for replacement of alleged defective proprietary parts must be referred direct to the respective component manufacturers or their nearest Service Station *and not to The M.G. Car Company Limited.*

New proprietary equipment and component parts can be obtained direct from the manufacturers as listed below or from the Service Department of The M.G. Car Company Limited at current list prices.

Name of Part.	*Name and Address of Manufacturer.*
Dynamo	J. Lucas Ltd., Great King Street, Birmingham.
Starter	Ditto
Starter Switch	Ditto
Distributor	Ditto
Ignition Coil	Ditto
Junction Box	Ditto
Regulator Box	Ditto
Ammeter	Ditto
Ignition Warning Light	Ditto
"Thirtilite"	Ditto
Instrument Panel and Switches	Ditto
Lamps	Ditto
Electric Bulbs	Ditto
Battery	Ditto
Electric Horn	Ditto
Windscreen Wiper	Ditto
Driving Mirror	Ditto
Illuminated Rear Number-plate	Ditto
"Trafficators"	Ditto
Dipper Switch	Ditto
Stop Lamp Switch	Ditto
Steering Column Controls	Ditto
Shock Absorbers	Luvax Ltd., Luvax Works, Warple Way, Acton, W.3.
Speedometer and Cable	British Jaeger Instruments Ltd., Chronos Works, N. Circular Road, London, N.W.2.
Revolution Counter and Cable	Ditto
Clock	Ditto
Reduction Box for Revolution Counter ...	Ditto
Oil Pressure Gauge	Ditto
Oil and Petrol Level Gauge	Ditto
Attachments for ditto	Ditto
Radiator Thermometer	Ditto
Thermostat	S. Smith & Sons (Motor Accessories) Ltd., Cricklewood Works, London, N.W.2.
Hydraulic Jacks...	Ditto
Carburetters	The S.U. Carburetter Co. Ltd., East Works, Bordesley Green Rd., Adderley Park, Birmingham.
Petrol Pumps	Ditto
Tyres	Dunlop Rubber Co. Ltd., Fort Dunlop, Birmingham.
Bumpers	Wilmot-Breeden Ltd., Eastern Works, Camden Street, Birmingham.
Sun Visor	Ditto
Radiator	To Authorised M.G. Radiator Repair Stations.
Sparking Plugs	Champion Sparking Plug Co. Ltd., 83 Pall Mall, London, S.W.1.
Air Cleaner	A.C. Sphinx Sparking Plug Co. Ltd., Dunstable, Beds.

INDEX

	Page
Accelerator	36
Axle (Front)	2—5
Axle (Rear)	6—9
Badge Bar	52
Battery	49
Body Details (Saloon)	55—63
Body Details (Foursome)	63—64
Body Details (Tourer)	64—69
Bonnet and Fasteners	51
Brake Gear	31—36
Bumper (Front)	52
Bumper (Rear)	52
Carpets (Saloon)	61
Carpets (Tourer)	66
Chassis Frame	2
Controls	36
Differential	6
Engine Mounting	31
Engine Shield	44
Exhaust System	38
Facia Equipment	44
Floorboards (Saloon)	61
Floorboards (Tourer)	66
Footwell	55
Harnessed Cables	50
Hood	69
Horn	49
Ignition Coil	49
Instrument Panel	44
Jacking System	43
Junction Box	49
Lamps	45
Lubricating System	42
Mirror	46
Number-plates	41
Petrol Pipes	41
Petrol Pump	41
Petrol Tank	41
Power Unit Details	10—31
Bell Housing	10
Camshaft and Bearings	12
Carburetters	16—17
Clutch	25—26
Connecting Rods	12
Crankshaft and Bearings	11
Cylinder Block	10
Cylinder Head	12
Distributor	18
Dynamo	17
Fan	22
Flywheel	11
Front Bearer Plate	11
Gearbox	26—30
Gearbox Remote Control	30
Lubrication Details	18—22
Manifolds	15
Oil Filter	21
Oil Pipes	21—22
Oil Pump	21
Pistons	12
Starter Motor	18
Thermostat	25
Timing Chain Case	11
Valve Gear	12
Water Pump	22—25
Propeller Shaft	9
Radiator and Connections	38
Regulator Box	49
Running-boards	51
Seats (Saloon)	58
Seats (Foursome)	64
Seats (Tourer)	65
Shock Absorbers	42
Side Curtains	69
Spare Wheel Carrier	52
Splasher	51
Springs (Front)	5
Springs (Rear)	9
Steering Gear	37
Tools	69—70
Wheels	41
Windscreen (Saloon)	61
Windscreen (Foursome)	64
Windscreen (Tourer)	65
Windscreen Wiper	46
Wings (Front)	50
Wings (Rear)	51

Do not forget to quote Chassis, Engine and Body Numbers in all Correspondence

Part No.	DESCRIPTION	No. Used Saloon	Tourer	Foursome
	CHASSIS FRAME			
MG713	**Chassis frame assembly**	1	1	1
MG713/1	Front cross tube assembly	1	1	1
MG713/2	Rear spring front cross tube assembly	1	1	1
MG713/112	Bracket for Jackall rear junction box	1	1	1
MG713/126	Bush for front dumb-irons	2	2	2
MG713/127	Bracket for front wing stay O/S	1	1	1
MG713/128	„ „ „ „ „ N/S	1	1	1
MG713/129	Engine front mounting bracket	2	2	2
MG713/130	Bracket for torque cable	2	2	2
MG713/143	Battery carrier	1	1	1
MG713/126	Bush for rear spring bracket	2	2	2
MG713/152	Bracket for rear bumper O/S	1	1	1
MG713/153	„ „ „ „ N/S	1	1	1
MG713/161	Body bracket (front) O/S	1	1	1
MG713/159	Body bracket and spare wheel support bracket N/S	1	—	1
MG713/157	Body bracket (front) N/S	—	1	—
MG713/141	Body bracket and front wing support O/S ...	1	1	1
MG713/158	Body bracket (engine rear bearer cross tube) N/S	1	—	1
MG713/160	Body bracket and front wing support N/S ...	—	1	—
MG713/145	Body bracket (3rd cross tube) O/S	1	1	1
MG713/146	„ „ (3rd cross tube) N/S	1	1	1
MG713/147	„ „ (rear spring front cross tube) O/S	1	1	1
MG713/148	„ „ (rear spring front cross tube) N/S	1	1	1
MG713/149	„ „ (rear) O/S	1	1	1
MG713/150	„ „ (rear) N/S	1	1	1

ALTERATIONS

.....

.....

.....

.....

.....

.....

	FRONT AXLE AND SPRINGS (illustration on page 4)			
MG714	**Front axle assembly** (less springs and wheels) ...	1	1	1
MG714/100	Front axle beam	1	1	1
MG714/6	Steering knuckle O/S with bushes	1	1	1
MG714/7	„ „ N/S with bushes	1	1	1
MG714/131	Bush for steering knuckle (top)	2	2	2
MG714/132	„ „ „ „ (bottom)	2	2	2
P101/113	Slotted nut for steering knuckle (R.H. thread)	1	1	1
P101/114	„ „ „ „ „ (L.H. thread)	1	1	1
P101/115	Washer for steering knuckle (outer)	2	2	2
MG714/105	Steering arm (track rod) O/S	1	1	1
MG714/106	„ „ (track rod) N/S	1	1	1
MG714/107	„ „ (draglink)	1	1	1
S95/4	Key for steering arms	3	3	3
MG662/111	Slotted nut for steering arms	3	3	3
MG714/108	King pin ... ... Ceased Ch. No. VA1253	2	2	2
MG714/126	„ „ ... ... Comm. Ch. No. VA1254	2	2	2
MG662/113	Cotter pin for ditto	2	2	2
MG714/120	Thrust race for king pin ... ... (Ceased Ch. No. VA1253)	2	2	2
MG714/109	Leather washer for king pin ... (Ceased Ch. No. VA1253)	2	2	2
MG714/111	Cap for king pin ... ... (Ceased Ch. No. VA1253)	2	2	2
MG714/112	Retainer for ditto ... ... (Ceased Ch. No. VA1253)	2	2	2
MG714/110	Nut for king pin ... ... (Ceased Ch. No. VA1253)	2	2	2
MG714/128	Thrust washer for king pin ... (Comm. Ch. No. VA1254)	2	2	2
MG714/127	Felt washer for king pin ... ... (Comm. Ch. No. VA1254)	2	2	2
MG688/110	Retainer for ditto ... ... (Comm. Ch. No. VA1254)	2	2	2
MG714/113	Swivel stop screw	2	2	2
S1/15	Greaser for steering knuckles Ceased Ch. No. VA1794	4	4	4
S1/21	Ditto ... ... Comm. Ch. No. VA1795	4	4	4
MG714/123	Plug for steering knuckle (bottom) Comm. Axle No. 904	2	2	2
MG714/3	Front hub O/S with studs	1	1	1
MG714/4	„ „ N/S with studs	1	1	1
MG662/138	Stud for front hub	10	10	10
P234/113	Screw for front hub (split pin hole)	2	2	2
S1/15	Greaser for front hub Ceased Ch. No. VA1794	2	2	2
S1/21	„ „ „ „ Comm. Ch. No. VA1795	2	2	2

Please Quote Chassis, Engine and Body Numbers when ordering Parts

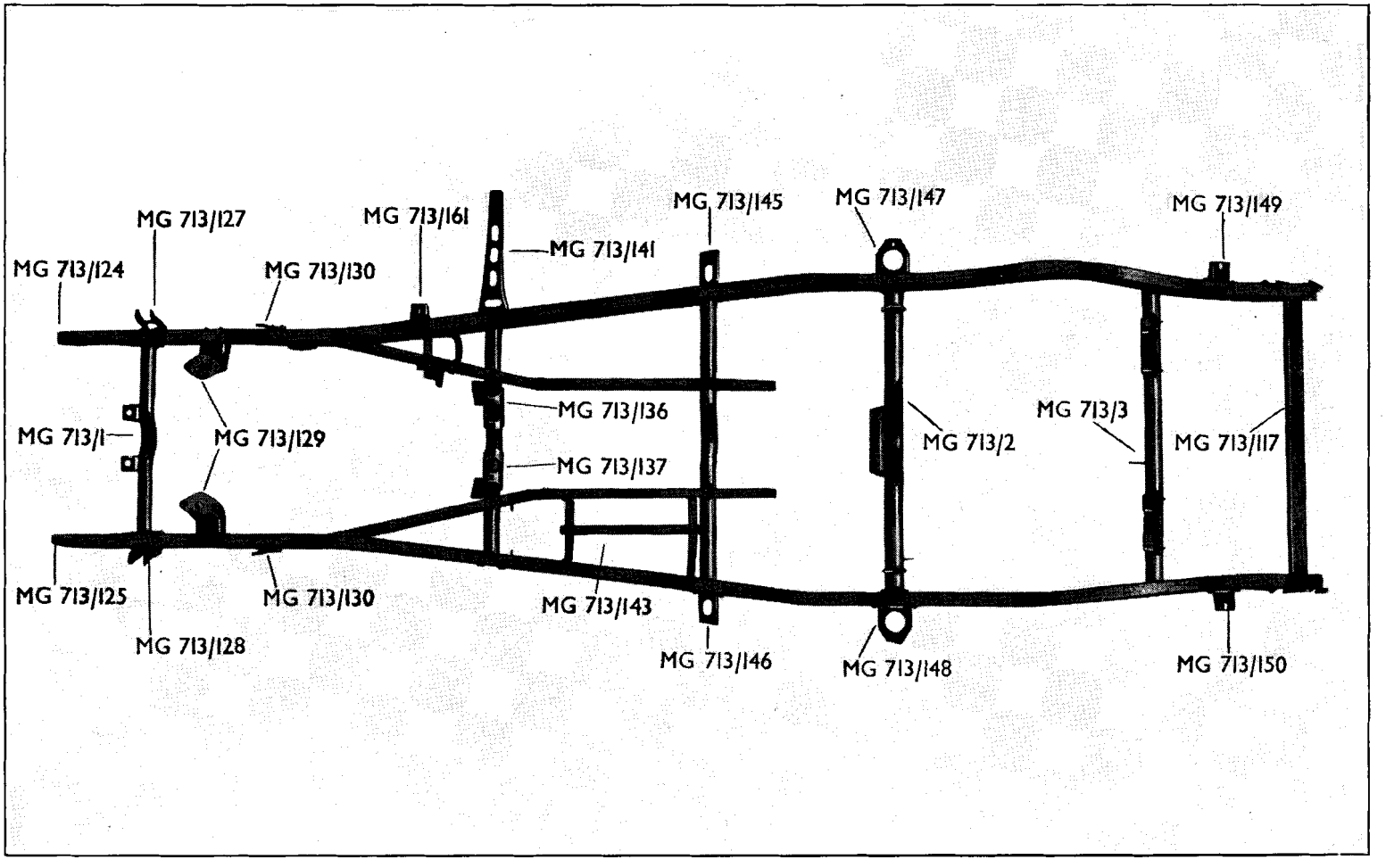
MG 713/127
MG 713/161
MG 713/145
MG 713/147
MG 713/149
MG 713/141
MG 713/124
MG 713/130
MG 713/136
MG 713/3
MG 713/1
MG 713/129
MG 713/2
MG 713/117
MG 713/137
MG 713/125
MG 713/130
MG 713/143
MG 713/128
MG 713/146
MG 713/148
MG 713/150

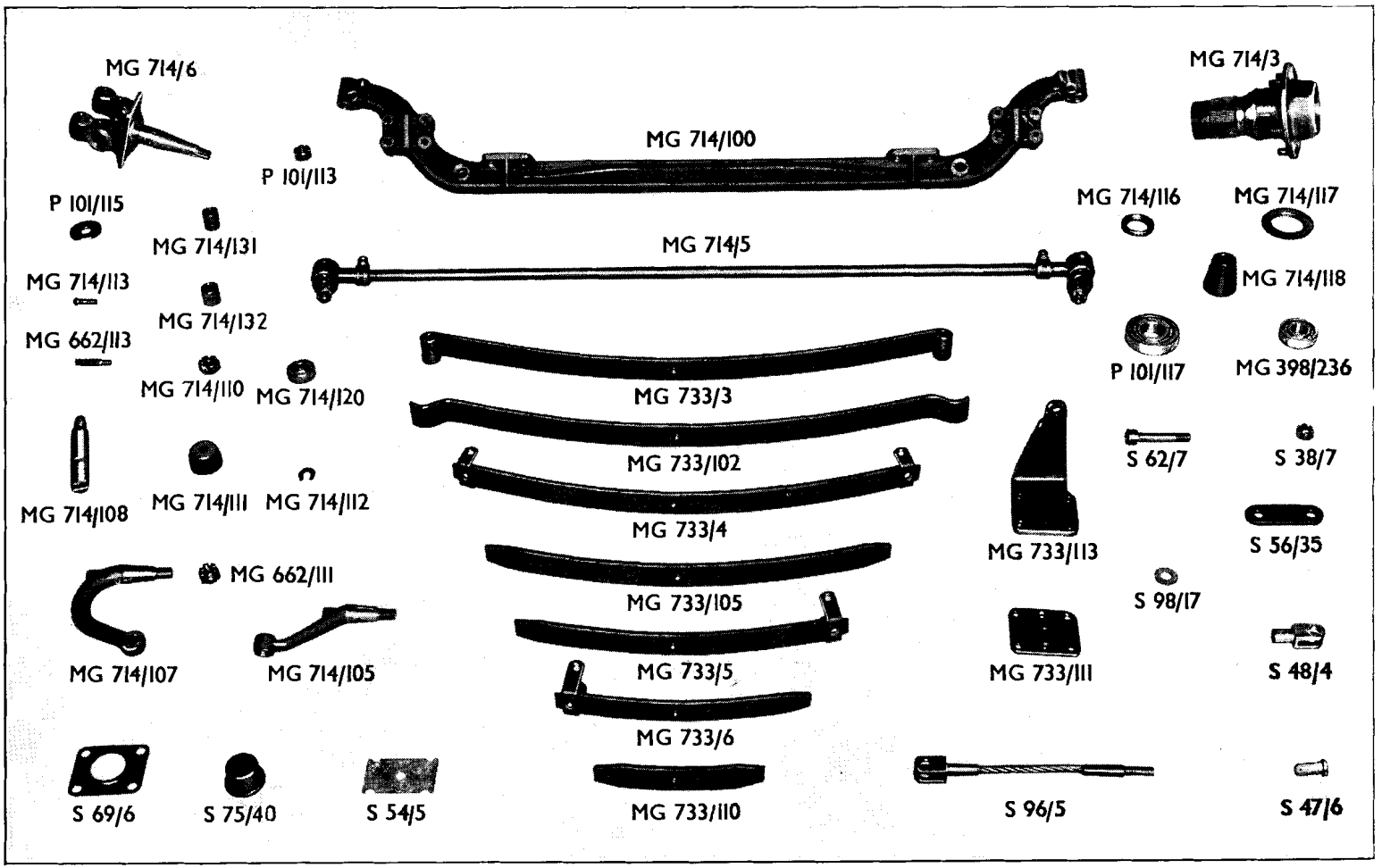
MG 714/6
MG 714/100
MG 714/3
P 101/113
P 101/115
MG 714/116
MG 714/117
MG 714/131
MG 714/5
MG 714/113
MG 714/118
MG 714/132
MG 662/113
P 101/117
MG 398/236
MG 714/110
MG 714/120
MG 733/3
MG 733/102
S 62/7
S 38/7
MG 714/108
MG 714/111
MG 714/112
MG 733/4
MG 733/113
S 56/35
MG 662/111
MG 733/105
S 98/17
MG 714/107
MG 714/105
MG 733/5
MG 733/111
S 48/4
MG 733/6
S 69/6
S 75/40
S 54/5
MG 733/110
S 96/5
S 47/6

Part No.	DESCRIPTION		No. Used Saloon	Tourer	Foursome
MG714/116	Distance washer for front hub (inner)		2	2	2
MG714/117	Oil seal for front hub		2	2	2
MG398/236	Bearing for front hub (inner)		2	2	2
MG714/118	Distance piece for front hub bearings		2	2	2
P101/117	Bearing for front hub (outer)		2	2	2
MG714/129	Brake-drum		2	2	2
MG714/5	Track rod assembly		1	1	1
MG714/121	Track rod tube		1	1	1
A999	Track rod end complete O/S		1	1	1
A1000	" " " " N/S		1	1	1
A999/100	Clamp for track rod end		2	2	2
A999/101	Bolt for ditto		2	2	2
A999/102	Nut for ditto		2	2	2
X661/13	Spring washer for ditto		2	2	2
A999/105	Felt washer for track rod end		2	2	2
A999/104	Spring for ditto		2	2	2
A999/103	Cover for ditto		2	2	2
A999/106	Nut for track rod ball pin		2	2	2
S1/10	Greaser for track rod	Ceased Ch. No. VA1794	2	2	2
S1/25	" " " "	Comm. Ch. No. VA1795	2	2	2
MG733/1	**Front spring O/S** (complete with brackets)		1	1	1
MG733/2	" " **N/S** (complete with brackets)		1	1	1
MG733/3	Front spring main leaf with bushes ...		2	2	2
MG733/101	Bush for main leaf		4	4	4
MG733/102	Front spring 2nd leaf		2	2	2
MG733/4	Front spring 3rd leaf with clips ...	Ceased	2	2	2
MG733/104	Leaf clip for 3rd leaf	Ch. No.	4	4	4
MG733/105	Front spring 4th leaf	VA1254	2	2	2
MG733/5	Front spring 5th leaf with clips ...		2	2	2
MG733/107	Leaf clip for 5th leaf		2	2	2
MG733/6	Front spring 6th leaf with clips ...		2	2	2
MG733/109	Leaf clip for 6th leaf		2	2	2
MG733/110	Front spring 7th leaf		2	2	2
MG793/1	**Front spring O/S** (complete with brackets)		1	1	1
MG793/2	" " **N/S** (complete with brackets)		1	1	1
MG793/3	Front spring main leaf with bushes ...		2	2	2
MG733/101	Bush for main leaf		4	4	4
MG793/101	Front spring 2nd leaf		2	2	2
MG793/4	Front spring 3rd leaf with clips ...	Comm.	2	2	2
MG793/103	Leaf clip for 3rd leaf	Ch. No.	4	4	4
MG793/104	Front spring 4th leaf	VA1255	2	2	2
MG793/5	Front spring 5th leaf with clips ...		2	2	2
MG793/106	Leaf clip for 5th leaf		2	2	2
MG793/6	Front spring 6th leaf with clips ...		2	2	2
MG793/108	Leaf clip for 6th leaf		2	2	2
MG793/109	Front spring 7th leaf		2	2	2
MG733/111	Front spring bottom plate...		2	2	2
MG733/112	Bracket for torque cable O/S		1	1	1
MG733/113	" " " " N/S		1	1	1
MG733/114	Screw for leaf clips	Ceased Ch.	8	8	8
S55/24	Distance tube for ditto	No. VA1254	8	8	8
S56/35	Front shackle plates		4	4	4
S62/7	Shackle pin for front spring		6	6	6
S98/17	Thrust washer for shackle pin		8	8	8
S38/7	Slotted nut for shackle pin		6	6	6
S1/14	Greaser for front shackles	Ceased Ch. No. VA1794	4	4	4
S1/22	" " " "	Comm. Ch. No. VA1795	4	4	4
S54/5	Taper packing for front spring		2	2	2
S98/20	Distance collar for front spring bolt		8	8	8
S75/40	Buffer for front spring		2	2	2
S96/5	Torque cable		2	2	2
S48/4	Yoke end for ditto		2	2	2
S47/6	Fulcrum pin for ditto		4	4	4

ALTERATIONS

.....

.....

.....

.....

.....

.....

.....

.....

.....

Part No.	DESCRIPTION	No. Used Saloon	Tourer	Foursome
	REAR AXLE, SPRINGS AND PROPELLER SHAFT			
MG715	**Rear axle assembly** (less springs and wheels) Ceased Ch. No. VA1254	1	1	1
MG787	**Ditto** (less springs and wheels) Comm. Ch. No. VA1255	1	1	1
MG715/1	Rear axle housing assembly Ceased Ch. No. VA1254	1	1	1
MG787/1	" " " " Comm. Ch. No. VA1255	1	1	1
MG689/129	Drain plug for rear axle housing...	1	1	1
MG787/2	Differential carrier (complete with differential assembly and crown wheel and pinion)	1	1	1
MG715/3	Differential carrier (studded) with differential bearing caps ... ... Ceased Ch. No. VA1254	1	1	1
MG787/3	Ditto (studded) with differential bearing caps Comm. Ch. No. VA1255	1	1	1
X364/8	Dowel bush for differential bearing cap... ...	4	4	4
MG715/139	Bolt for differential bearing caps	4	4	4
MG715/108	Stud for bevel pinion housing	6	6	6
MG689/4	Filler plug for rear axle	1	1	1
S29/7	Washer for ditto	1	1	1
MG715/4	Differential assembly (less crown wheel and pinion)	1	1	1
MG715/5	Differential case complete	1	1	1
MG364/178	Differential wheel	2	2	2
X364/10	Differential pinion	4	4	4
X555/3	Differential spider	1	1	1
S33/67	Bolt for differential case	8	8	8
X364/12	Lock plate for ditto	4	4	4
MG679/317	Bearing for differential case	2	2	2
MG715/111	Adjusting nut for ditto	2	2	2
MG715/112	Lock washer for ditto	2	2	2
S31/8	Screw for ditto	2	2	2
MG715/6	Crown wheel and pinion (9/47 ratio) Ceased Ch. No. VA1254	1 pr.	1 pr.	1 pr.
MG787/4	Ditto (9/47 ratio) ... Comm. Ch. No. VA1255	1 pr.	1 pr.	1 pr.
S33/45	Bolt (crown wheel to differential case) ...	10	10	10
MG715/115	Lock plate for ditto	5	5	5
X364/4	Roller bearing for pinion (rear) Ceased Ch. No. VA1254	1	1	1
MG787/107	Ditto (rear) ... Comm. Ch. No. VA1255	1	1	1
MG715/116	Circlip for ditto	2	2	2
MG715/117	Distance piece for pinion bearings Ceased Ch. No. VA1254	1	1	1
MG787/108	Ditto ... ... Comm. Ch. No. VA1255	1	1	1
X715/1	Ball bearing for pinion (front)	1	1	1
MG715/140	Housing for ditto	1	1	1
MG715/121	Shim for ditto (.002")		As required	
MG715/122	" " " (.003")		As required	
MG715/123	" " " (.005")		As required	
MG715/124	" " " (.010")		As required	
MG715/118	Cork seal for pinion	1	1	1
MG715/120	Cap for pinion housing	1	1	1
P105/127	Screw for ditto	2	2	2
MG715/134	Propeller shaft flange	1	1	1
MG663/136	Castle nut for ditto	1	1	1
MG715/126	Washer for ditto	1	1	1
MG715/127	Joint for differential carrier	1	1	1
MG715/7	Rear hub bearing housing with studs	2	2	2
MG715/141	Stud for ditto	10	10	10
MG715/130	Oil seal for rear hub	2	2	2
P105/112	Bearing for rear hub	2	2	2
MG689/123	Adjusting nut for ditto (R.H. thread) } Ceased Axle	1	1	1
MG689/124	" " " " (L.H. thread) } No. 2708	1	1	1
MG787/109	Adjusting nut for ditto (R.H. thread) } Comm. Axle	1	1	1
MG787/110	" " " " (L.H. thread) } No. 2709	1	1	1
MG689/125	Lock washer for ditto	2	2	2
MG715/135	Rear hub O/S	1	1	1
MG715/136	" " N/S	1	1	1
MG715/137	Plug for rear hub ... Comm. Axle No. 1160	2	2	2
MG715/138	Joint for rear hub	2	2	2
S1/15	Greaser for rear hub Ceased Ch. No. VA1794	2	2	2
S1/21	" " " " Comm. Ch. No. VA1795	2	2	2

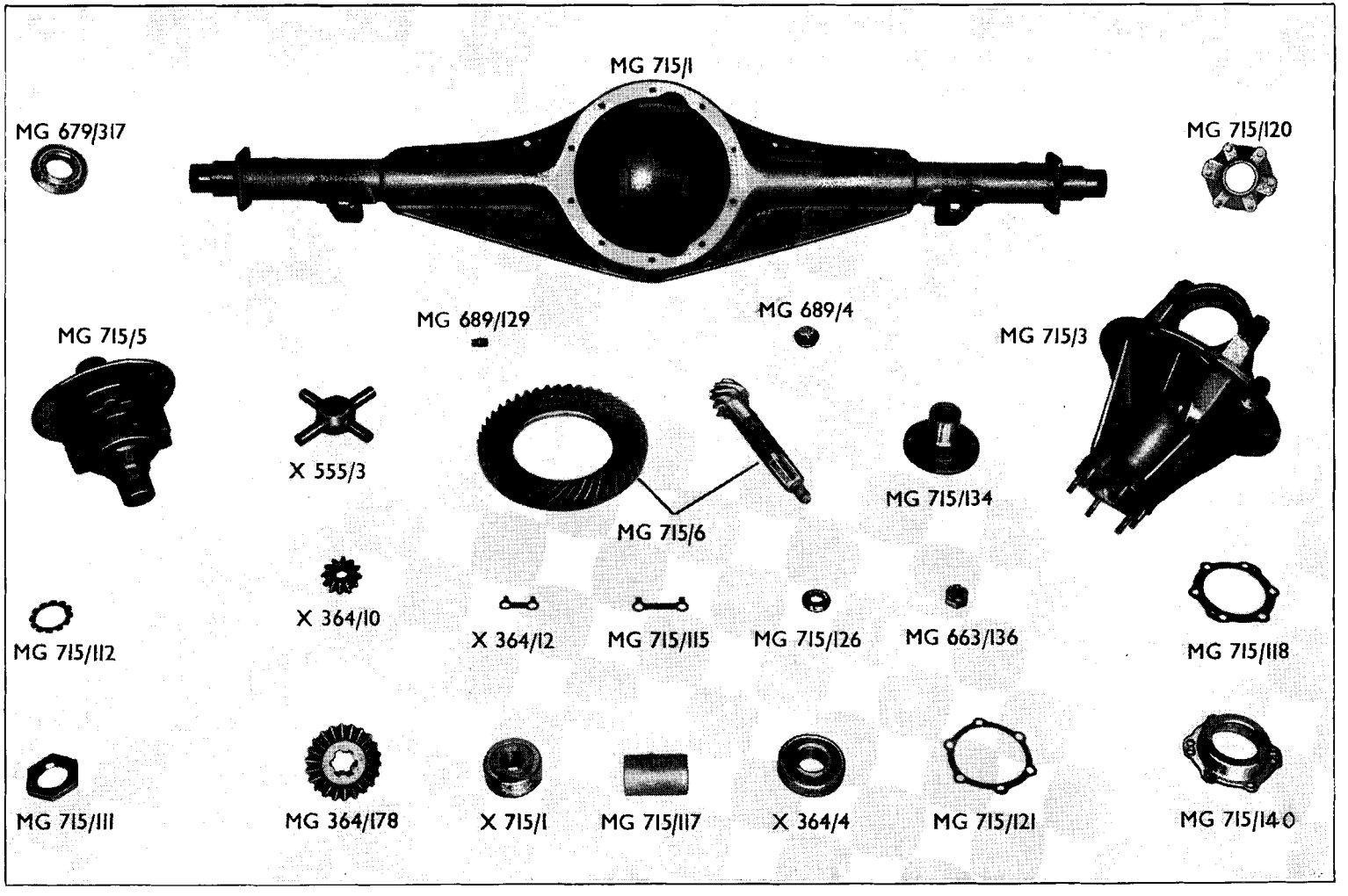
MG 715/1
MG 679/317
MG 715/120
MG 715/5
MG 689/129
MG 689/4
MG 715/3
X 555/3
MG 715/6
MG 715/134
X 364/10
MG 715/112
X 364/12
MG 715/115
MG 715/126
MG 663/136
MG 715/118
MG 715/111
MG 364/178
X 715/1
MG 715/117
X 364/4
MG 715/121
MG 715/140

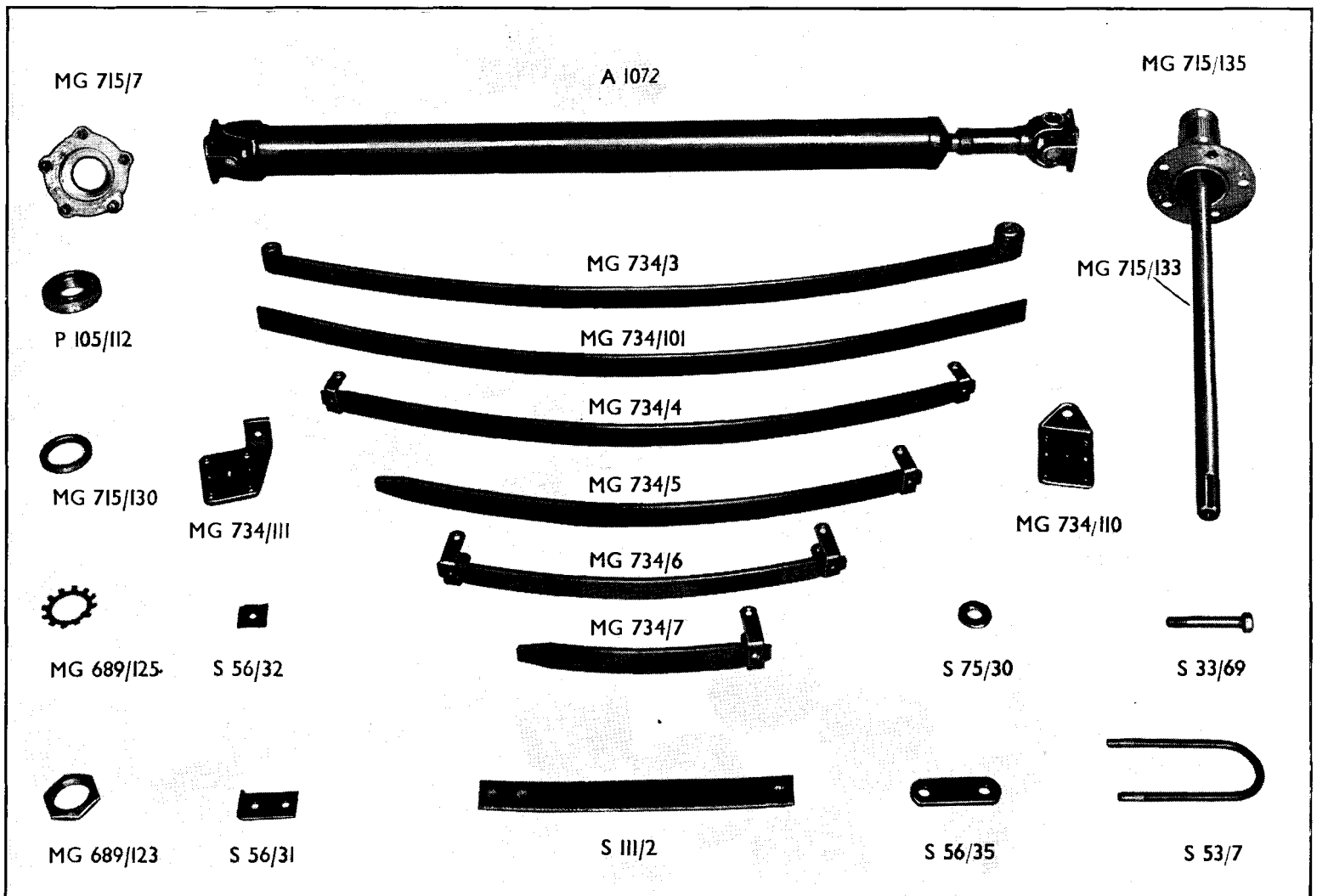
MG 715/7
A 1072
MG 715/135
MG 734/3
MG 715/133
P 105/112
MG 734/101
MG 734/4
MG 715/130
MG 734/111
MG 734/5
MG 734/110
MG 734/6
MG 734/7
MG 689/125
S 56/32
S 75/30
S 33/69
MG 689/123
S 56/31
S 111/2
S 56/35
S 53/7

Part No.	DESCRIPTION		No. Used Saloon	Tourer	Foursome
MG715/133	Rear axle drive shaft		2	2	2
MG714/129	Brake-drum		2	2	2
MG734/1	**Rear springs (complete with brackets) O/S**		1	1	1
MG734/2	**" " " " " N/S**		1	1	1
MG734/3	Rear spring main leaf with silentbloc and bush		2	2	2
S17/20	Silentbloc for main leaf		2	2	2
MG733/101	Bush for main leaf		2	2	2
MG734/101	Rear spring 2nd leaf		2	2	2
MG734/4	Rear spring 3rd leaf with clips ...		2	2	2
MG734/103	Leaf clip for 3rd leaf		4	4	4
MG734/5	Rear spring 4th leaf with clips ...	Ceased	2	2	2
MG734/105	Leaf clip for 4th leaf	Ch. No.	2	2	2
MG734/6	Rear spring 5th leaf with clips ...	VA1254	2	2	2
MG734/107	Leaf clip for 5th leaf		4	4	4
MG734/7	Rear spring 6th leaf with clip ...		2	2	2
MG734/109	Leaf clip for 6th leaf		2	2	2
MG734/110	Bracket for rear shock absorber ...		2	2	2
MG734/111	Rear spring bottom plate O/S ...		1	1	1
MG734/112	" " " " N/S ...		1	1	1
MG733/114	Screw for leaf clips		12	12	12
S55/14	Distance tube for ditto		12	12	12
MG734/113	Screw for spring plate		4	4	4
MG794/1	**Rear spring (complete with brackets) O/S**		1	1	1
MG794/2	**" " " " " N/S**		1	1	1
MG794/3	Rear spring main leaf with silentbloc and bush		2	2	2
S17/20	Silentbloc for main leaf		2	2	2
MG733/101	Bush for main leaf		2	2	2
MG794/101	Rear spring 2nd leaf		2	2	2
MG794/4	Rear spring 3rd leaf with clips ...		2	2	2
MG794/103	Leaf clip for 3rd leaf	Comm.	4	4	4
MG794/5	Rear spring 4th leaf with clip ...	Ch. No.	2	2	2
MG794/105	Leaf clip for 4th leaf	VA1255	2	2	2
MG794/6	Rear spring 5th leaf with clips ...		2	2	2
MG794/107	Leaf clip for 5th leaf		4	4	4
MG794/7	Rear spring 6th leaf with clip ...		2	2	2
MG794/109	Leaf clip for 6th leaf		2	2	2
MG794/110	Bracket for rear shock absorber ...		2	2	2
MG794/111	Rear spring bottom plate O/S ...		1	1	1
MG794/113	" " " " N/S ...		1	1	1
MG794/112	Locating pin for ditto		2	2	2
S56/35	Rear shackle for rear spring		4	4	4
S62/7	Rear shackle pin for rear spring		4	4	4
S98/17	Thrust washer for ditto		4	4	4
S38/7	Slotted nut for ditto		4	4	4
S33/69	Front pin for rear spring		2	2	2
S75/30	Rubber washer for ditto		4	4	4
S53/7	" U " clip for rear spring	Ceased Ch. No. VA1254	4	4	4
S53/8	Ditto	Comm. Ch. No. VA1255	4	4	4
S111/2	Check strap for rear axle		2	2	2
S56/31	Top plate for check strap		2	2	2
S56/32	Bottom plate for check strap		2	2	2
S75/24	Buffer for rear spring	Ceased Ch. No. VA1254	2	2	2
S75/34	" " " "	Comm. Ch. No. VA1255	2	2	2
A1072	Propeller shaft		1	1	1
S33/47	Bolt for propeller shaft flange		8	8	8
S1/10	Greaser for propeller shaft	Ceased Ch. No. VA1794	1	1	1
S1/25	Ditto	Comm. Ch. No. VA1795	1	1	1

ALTERATIONS

.....

.....

.....

.....

.....

.....

.....

.....

.....

.....

.....

.....

Part No.	DESCRIPTION	No. Used Saloon	Tourer	Foursome

POWER UNIT (illustration on page 13)

CYLINDER BLOCK

MG795/10	Cylinder block (studded) with main bearing caps ...	1	1	1
X706/1	Core plug	5	5	5
MG679/115	Stud for cylinder head (long)	8	8	8
MG679/116	" " " " (short)	3	3	3
MG679/108	Stud for main bearings (long)	3	3	3
MG679/109	" " " " (short)	3	3	3
X151/45	Stud for water pump bearing bracket	2	2	2
X679/4	Dowel for main bearing (locating)	3	3	3
MG679/143	Cap for front main bearing	1	1	1
MG735/101	Cap for intermediate main bearing	1	1	1
MG735/102	Cap for rear main bearing...	1	1	1
X679/13	Dowel for main bearings (in caps)	3	3	3
MG679/146	Nut for main bearing caps (front and rear) ...	4	4	4
MG679/478	" " " " " (intermediate) ...	2	2	2
X679/5	Dowel for tappet blocks	4	4	4
MG706/139	Plug for oil gallery	2	2	2
MG706/451	Plug for crankshaft and camshaft feed	3	3	3
MG679/232	Sleeve for distributor	1	1	1
MG679/112	Drain tap for cylinder block	1	1	1
P151/110	Washer for ditto	1	1	1
MG679/118	Bearing block for tappets	2	2	2
MG679/120	Guard for ditto	2	2	2
X679/7	Bolt for securing tappet block	4	4	4
MG679/119	Lock plate for ditto	2	2	2
MG735/104	Tappet inspection cover	1	1	1
MG795/101	Joint for ditto	1	1	1
MG735/106	Screw for securing tappet inspection cover ...	2	2	2
MG679/123	Washer for ditto	2	2	2
MG679/28	Breather pipe with bolt and nut	1	1	1
X679/41	Bolt for breather pipe clip	1	1	1
X151/5	Nut for ditto	1	1	1
X151/6	Spring washer for ditto	1	1	1
S117/4	Breather pipe ... Ceased Eng. No. TPBG1509	1	1	1
S117/3	" " ...Comm. Eng. No. TPBG1510	1	1	1
S49/14	Clip for ditto (bottom)	1	1	1

ALTERATIONS

.....
.....
.....
.....
.....
.....
.....
.....
.....
.....
.....
.....

BELL HOUSING (illustration on page 13)

MG735/107	Bell housing ...	Ceased Eng. No. TPBG1509	1	1	1
MG795/102	" " ...	Comm. Eng. No. TPBG1510	1	1	1
MG679/479	Joint for ditto	Ceased Eng. No. TPBG1509	1	1	1
MG795/103	" " "	Comm. Eng. No. TPBG1510	1	1	1
X679/3	Bolt (bell housing to cylinder block)		11	11	11
X151/15	Spring washer for ditto		11	11	11
X679/2	Dowel for bell housing		2	2	2
MG795/104	Split pin for bell housing (bottom)	Comm. Eng. No. TPBG1510	1	1	1

ALTERATIONS

.....
.....
.....
.....
.....
.....

Part No.	DESCRIPTION	No. Used Saloon	Tourer	Foursome
	FRONT BEARER PLATE AND TIMING CHAIN CASE (illustration on page 13)			
MG735/3	Front bearer plate with bracket for dynamo ...	1	1	1
MG735/109	Bracket for dynamo	1	1	1
MG706/430	Rivet for ditto	3	3	3
MG679/130	Joint for front bearer plate	1	1	1
X151/19	Bolt for securing front bearer plate (long) ...	8	8	8
MG679/131	" " " " " " (short) ...	1	1	1
X151/15	Spring washer for ditto	9	9	9
X679/2	Dowel for front bearer plate	2	2	2
MG679/2	Timing chain case assembly	1	1	1
MG679/135	Cover for oil seal	1	1	1
X679/12	Oil seal for crankshaft	1	1	1
P151/508	Screw for securing oil seal cover	6	6	6
X151/21	Spring washer for ditto	6	6	6
X679/9	Thrust spring for camshaft	1	1	1
X679/10	Rivet for ditto	2	2	2
MG679/136	Joint for timing chain case	1	1	1
X679/11	Bolt for securing timing chain case	7	7	7
X151/15	Spring washer for ditto	7	7	7

ALTERATIONS

.....

.....

.....

.....

.....

	CRANKSHAFT, MAIN BEARINGS AND FLYWHEEL (illustration on page 13)				
MG735/278	Crankshaft ... Ceased Eng. No. TPBG1509		1	1	1
MG795/105	" ... Comm. Eng. No. TPBG1510				
	Ceased Eng. No. TPBG1890		1	1	1
MG795/139	" ... Comm. Eng. No. TPBG1891		1	1	1
MG795/3	Crankshaft main bearing complete (front and rear)		2	2	2
MG795/4	" " " " (intermediate) ...		1	1	1
MG735/4	Flywheel with clutch driving pins and crankshaft dowels ...	Ceased Eng. No. TPBG1509	1	1	1
MG679/148	Clutch driving pins		3	3	3
X679/14	Dowel for crankshaft ...		2	2	2
MG795/26	Flywheel with dowels for crankshaft and clutch cover ...	Comm. Eng. No. TPBG1510	1	1	1
MG795/140	Dowel for clutch cover ...		2	2	2
MG795/111	Dowel for crankshaft ...		2	2	2
MG795/28	Oil thrower for crankshaft (rear)		1	1	1
MG795/218	Bush for ditto		1	1	1
X679/15	Spigot bearing for gearbox first motion shaft	Ceased Eng. No. TPBG1509	1	1	1
MG679/57	Centre for first motion shaft spigot bearing with pins ...		1	1	1
MG679/151	Retaining plate for spigot bearing		1	1	1
X679/16	Circlip for spigot bearing ...		1	1	1
P151/409	Spigot bearing for gearbox first motion shaft	Comm. Eng. No. TPBG1510	1	1	1
MG795/113	Retaining plate for spigot bearing		1	1	1
MG679/152	Bolt for securing flywheel				
	Ceased Eng. No. TPBG1509		6	6	6
MG795/114	Ditto ... Comm. Eng. No. TPBG1510		6	6	6
MG679/153	Spring for spigot bearing centre	Ceased Eng. No.TPBG1509	3	3	3
X679/18	Circlip for ditto		1	1	1
MG679/157	Camshaft driving sprocket (on crankshaft) ...		1	1	1
X151/8	Key for ditto		1	1	1
MG679/158	Oil thrower for crankshaft...		1	1	1
MG735/112	Fan pulley (on crankshaft)		1	1	1
X151/8	Key for ditto		1	1	1
MG735/113	Nut for crankshaft		1	1	1
MG735/114	Washer for ditto		1	1	1
MG735/115	Shim for ditto			As required	

ALTERATIONS

.....

.....

.....

.....

.....

.....

.....

Part No.	DESCRIPTION	No. Used Saloon	Tourer	Foursome
	.....			
	.....			
	.....			
	.....			
	.....			

CAMSHAFT AND BEARINGS

MG795/201	Camshaft	1	1	1
MG679/165	Timing sprocket (on camshaft)	1	1	1
X151/8	Key for ditto	1	1	1
MG679/74	Washer for timing sprocket with snug ...	1	1	1
X679/23	Screw for timing sprocket	1	1	1
X679/24	Lock washer for ditto	1	1	1
MG706/167	Camshaft bearing (front)	1	1	1
MG679/6	„ „ (intermediate) complete ...	1	1	1
MG735/284	„ „ (rear)	1	1	1
MG679/172	Screwed dowel for camshaft bearing	2	2	2
MG679/173	Plain dowel for camshaft bearing	2	2	2
MG679/174	Timing chain	1	1	1

ALTERATIONS

.....
.....
.....
.....
.....
.....

CONNECTING RODS AND PISTONS

MG679/26	Connecting rod with cap and bolts	4	4	4
MG679/7	Bolt for connecting rod cap with nut	8	8	8
X151/12	Nut for ditto	8	8	8
X151/14	Clamp screw for gudgeon pin	4	4	4
X151/15	Spring washer for ditto	4	4	4
MG679/97	Piston (complete with rings and gudgeon pin) ...	4	4	4
MG679/517	Piston ring (compression)	8	8	8
MG679/518	„ „ (scraper)	4	4	4
MG679/499	Gudgeon pin	4	4	4

ALTERATIONS

.....
.....
.....
.....
.....
.....

CYLINDER HEAD AND VALVE GEAR (illustration on page 14)

MG735/5	Cylinder head assembly (less manifolds and plugs)...	1	1	1
MG735/6	Cylinder head (studded) with valve guides	1	1	1
MG679/181	Stud for cylinder head cover	2	2	2
MG706/184	Stud for manifolds	8	8	8
P151/501	Stud for water inlet elbow (long)...	2	2	2
X151/45	„ „ „ „ „ (short)	2	2	2
MG679/182	Valve guide	8	8	8
MG735/118	Inlet valve	4	4	4
MG795/215	Exhaust valve	4	4	4
MG735/261	Valve spring (outer)	8	8	8
MG735/262	„ „ (intermediate)	8	8	8
MG735/263	„ „ (inner)	8	8	8
MG735/264	Top cap for valve springs Ceased	8	8	8
MG706/443	Packing ring for valve spring (top) } Comm. Eng.	8	8	8
MG706/444	Top cap for valve springs ... } No. TPBG2100	8	8	8
MG679/105	Split cotters for ditto ... ... (halves)	16	16	16
MG735/265	Seating washer for valve springs	8	8	8
MG679/186	Support bracket for rocker-shaft (slotted) ... ... } Ceased Eng. No. TPBG2249	2	2	2
MG679/187	Support bracket for rocker-shaft (plain)	2	2	2
MG679/186	Support bracket for rocker-shaft (front aud intermediate) } Comm. Eng. No. TPBG2250	3	3	3
MG706/449	Support bracket for rocker-shaft (rear)	1	1	1
MG679/188	Bolt for securing rocker-shaft support brackets	8	8	8

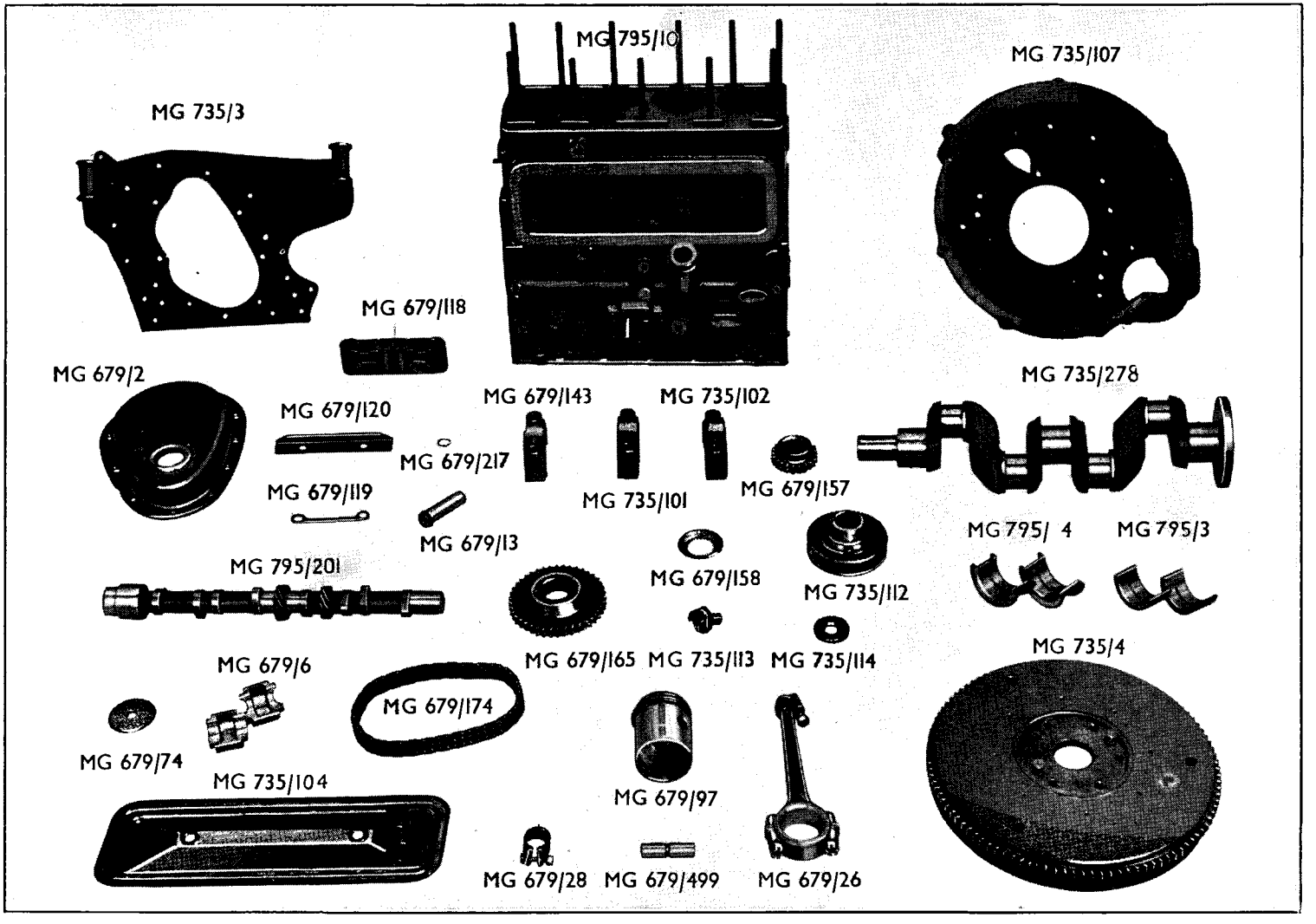
MG 795/10
MG 735/107
MG 735/3
MG 679/118
MG 679/2
MG 679/120
MG 679/143
MG 735/102
MG 735/278
MG 679/217
MG 679/119
MG 735/101
MG 679/157
MG 679/13
MG 795/ 4
MG 795/3
MG 795/201
MG 679/158
MG 735/112
MG 679/165
MG 735/113
MG 735/114
MG 735/4
MG 679/6
MG 679/174
MG 679/74
MG 735/104
MG 679/97
MG 679/28
MG 679/499
MG 679/26

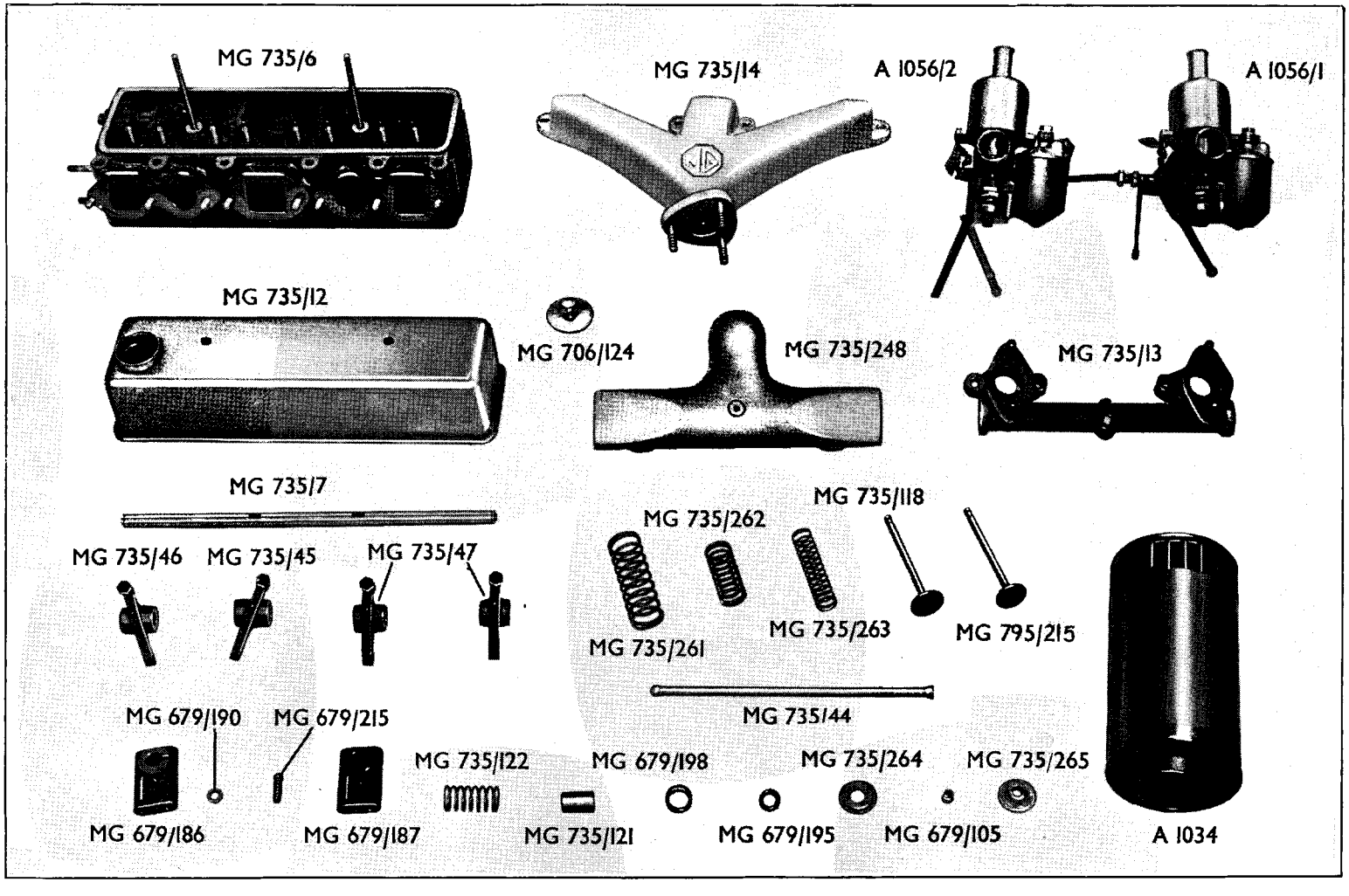
MG 735/6
MG 735/14
A 1056/2
A 1056/1
MG 735/12
MG 706/124
MG 735/248
MG 735/13
MG 735/7
MG 735/118
MG 735/262
MG 735/46
MG 735/45
MG 735/47
MG 735/261
MG 735/263
MG 795/215
MG 735/44
MG 679/190
MG 679/215
MG 735/122
MG 679/198
MG 735/264
MG 735/265
MG 679/186
MG 679/187
MG 735/121
MG 679/195
MG 679/105
A 1034

Part No.	DESCRIPTION	No. Used Saloon	Tourer	Foursome
MG679/189	Lock washer for securing rocker-shaft support bracket	4	4	4
MG679/190	Washer for rocker-shaft support bracket (centre)	2	2	2
MG706/450	Washer for rocker-shaft support bracket (front and rear)	2	2	2
MG735/7	Rocker-shaft with plugs	1	1	1
MG679/192	Plug for rocker-shaft	2	2	2
MG735/121	Spacer tube for rocker-shaft (long)	1	1	1
MG679/195	" " " " (short)	4	4	4
MG735/122	Spacer spring for rocker-shaft (long)	1	1	1
MG679/198	" " " " (short)	4	4	4
MG679/199	Spring clip for rocker-shaft	2	2	2
MG679/200	Washer for ditto	2	2	2
MG735/45	Rocker with bush (Nos. 3 and 7 valves)	2	2	2
MG735/46	" " " (Nos. 2 and 6 valves)	2	2	2
MG735/124	Bush for rocker (Nos. 2, 3, 6 and 7 valves) ...	4	4	4
MG735/47	Rocker with bush (Nos. 1, 4, 5 and 8 valves) ...	4	4	4
MG735/127	Bush for rocker (Nos. 1, 4, 5 and 8 valves) ...	4	4	4
MG679/215	Tappet adjusting screw	8	8	8
X151/7	Lock nut for ditto	8	8	8
MG735/129	Cylinder head gasket	1	1	1
MG679/207	Nut for securing cylinder head	11	11	11
MG735/12	Cylinder head cover assembly Ceased Eng. No. TPBG1509	1	1	1
MG795/6	Ditto ... ...Comm. Eng. No. TPBG1510	1	1	1
MG735/277	Tappet clearance instruction plate	1	1	1
X679/26	Rivet for ditto	2	2	2
MG706/124	Oil filler cap	1	1	1
MG735/132	Joint for cylinder head cover	1	1	1
MG706/446	Nut for securing cylinder head cover	2	2	2
X679/27	Washer for ditto	2	2	2
MG679/13	Tappet with cup and circlip	8	8	8
MG679/217	Circlip for tappet	8	8	8
MG735/44	Push rod Ceased Eng. No. TPBG2730 ...	8	8	8
MG795/29	Push rod Comm. Eng. No. TPBG2731 ...	8	8	8

ALTERATIONS

.....

.....

.....

.....

.....

.....

.....

.....

.....

.....

.....

.....

MANIFOLDS

MG735/13	Induction manifold (studded) with venturi tube ...	1	1	1
MG706/376	Stud for carburetter	4	4	4
MG679/349	Venturi tube	1	1	1
P151/182	Screw for ditto	1	1	1
X151/6	Spring washer for ditto	1	1	1
MG735/14	Exhaust manifold (studded)	1	1	1
MG706/199	Stud for flange	3	3	3
X679/58	Nut for ditto	3	3	3
X151/28	Spring washer for ditto	3	3	3
MG735/286	Joint for induction and exhaust manifolds ...	1	1	1
X706/10	Extension nut for securing manifolds (long) ...	5	5	5
X706/11	" " " " " (short) ...	1	1	1
X706/9	Plain nut for securing induction manifold ...	2	2	2

ALTERATIONS

.....

.....

.....

.....

.....

.....

Part No.	DESCRIPTION	No. Used Saloon	Tourer	Foursome
	CARBURETTERS AND AIR CLEANER			
A1023/1	Front carburetter complete Ceased Ch. No. VA0411	1	1	1
A1056/1	" " " Comm. Ch. No. VA0412 Ceased Ch. No. VA0996	1	1	1
A1078/1	" " " Comm. Ch. No. VA0997	1	1	1
A1023/2	Rear carburetter complete Ceased Ch. No. VA0411	1	1	1
A1056/2	" " " Comm. Ch. No. VA0412 Ceased Ch. No. VA0996	1	1	1
A1078/2	" " " Comm. Ch. No. VA0997	1	1	1
A960/4	Float-chamber with stud	2	2	2
A864/7	Float-chamber cover assembly	2	2	2
A864/117	Balance lever for float	2	2	2
A864/118	Fulcrum pin for ditto	2	2	2
A864/9	Float-chamber needle with seat	2	2	2
A433/148	Tickler pin for float	2	2	2
A864/121	Spring for ditto	2	2	2
A433/115	Filter for float-chamber cover	2	2	2
A864/116	Banjo union bolt	2	2	2
A562/121	Fibre washer for ditto (under head)	2	2	2
A433/144	Ditto (between banjo and float lid)	2	2	2
A864/114	Nut for securing float-chamber cover	2	2	2
A960/107	Overflow pipe (front carburetter)...	1	1	1
A960/108	" " (rear carburetter)	1	1	1
A864/145	Fibre washer for ditto	2	2	2
S2/68	Clip for overflow pipes	1	1	1
A433/145	Holding-up bolt for float-chamber	2	2	2
A433/146	Washer for ditto (langite)	2	2	2
A433/147	" " " (fibre)	2	2	2
A864/113	Sealing washer for float-chamber cover	2	2	2
A864/101	Float	2	2	2
A960/5	Suction chamber (bushed) with piston and rod	2	2	2
A433/128	Oil cap for suction chamber	2	2	2
A433/165	Screw for securing suction chamber (short) ...	2	2	2
A960/109	" " " " " (long) ...	2	2	2
S123/27	Carburetter needle	2	2	2
A864/125	Screw for ditto	2	2	2
A1023/3	Carburetter body ... Ceased Ch. No. VA0411	2	2	2
A1056/3	" " ... Comm. Ch. No. VA0412	2	2	2
A864/144	Jet lever (front carburetter) Ceased Ch. No. VA0949	1	1	1
A864/150	Ditto (front carburetter) Comm. Ch. No. VA0950	1	1	1
A864/126	Ditto (rear carburetter) Ceased Ch. No. VA0949	1	1	1
A864/151	Ditto (rear carburetter) Comm. Ch. No. VA0950	1	1	1
A1023/100	Return spring for ditto	2	2	2
A433/149	Link for jet lever (front carburetter)	1	1	1
A960/110	Combined jet link and stop for mixture control cable ... ... Ceased Ch. No. VA1047	1	1	1
A433/149	Link for jet lever (rear carburetter) Comm. Ch. No. VA1048	1	1	1
A433/150	Fulcrum pin for ditto (short)	4	4	4
A433/151	" " " " (long)	2	2	2
A562/7	Jet with head	2	2	2
A864/128	Bearing for jet (top half)	2	2	2
A433/152	Sealing washer for ditto	2	2	2
A433/153	Spring for jet bearing (top half)	2	2	2
A433/154	Bearing for jet (bottom half)	2	2	2
A433/155	Sealing washer for ditto	2	2	2
A864/129	Gland washer (fabric insertion)	4	4	4
A433/156	" " (brass)	2	2	2
A433/157	Locating sleeve for jet bearing (bottom half) ...	2	2	2
A433/158	Washer for ditto (brass)	2	2	2
A433/159	" " " (langite)	2	2	2
A433/160	Adjusting nut for jet	2	2	2
A433/166	Lock spring for ditto	2	2	2
A864/130	Throttle spindle (front carburetter) } Ceased	1	1	1
A1023/101	" " (rear carburetter) } Ch. No.	1	1	1
A864/132	Throttle valve (butterfly) ... ... } VA0411	2	2	2
A1056/100	Throttle spindle (front carburetter) } Comm.	1	1	1
A1056/101	" " (rear carburetter) } Ch. No.	1	1	1
A1056/102	Throttle valve (butterfly) ... ... } VA0412	2	2	2
A433/122	Screw for throttle valve	4	4	4
A960/113	Throttle operating lever (accelerator)	1	1	1

Part No.	DESCRIPTION	No. Used Saloon	Tourer	Foursome
A433/162	Throttle stop bell crank lever	1	1	1
A433/163	Adjusting screw for throttle operating lever and bell crank lever	2	2	2
A433/164	Lock spring for ditto	2	2	2
A864/135	Throttle operating lever (hand)	1	1	1
A864/136	Adjusting screw for ditto	1	1	1
A864/137	Lock spring for ditto	1	1	1
A469/107	Throttle return spring	1	1	1
A469/110	Collar for throttle spindle	1	1	1
A469/111	Screw for ditto	1	1	1
A1023/4	Flexible connection for throttle spindles with couplings ... (Ceased Ch. No. VA0996)	1	1	1
A960/114	Coupling for ditto ... ... (Ceased Ch. No. VA0996)	2	2	2
A433/167	Screw for ditto ... ... (Ceased Ch. No. VA0996)	4	4	4
A1078/4	Connection for throttle spindles (Comm. Ch. No. VA0997)	1	1	1
A1078/100	Operating lever for ditto ... (Comm. Ch. No. VA0997)	2	2	2
MG735/247	Mixture control connecting rod (Ceased Ch. No. VA0949)	1	1	1
S16/5	Ball joint for ditto ... ... (Ceased Ch. No. VA0949)	2	2	2
X679/87	Lock nut for ditto ... ... (Ceased Ch. No. VA0949)	4	4	4
X151/6	Spring washer for ditto ... (Ceased Ch. No. VA0949)	2	2	2
A1078/3	Mixture control connecting rod Comm. Ch. No. VA0950	1	1	1
MG706/111	Joint for carburetters	2	2	2
X151/27	Nut for securing carburetters	4	4	4
X151/28	Spring washer for ditto	4	4	4
MG706/445	Stop bracket for jet control (Comm. Ch. No. VA1048)	1	1	1
MG706/448	Packing piece for front carburetter ... ... (Comm. Ch. No. VA1048)	1	1	1
MG735/248	Air intake pipe	1	1	1
MG735/254	Support stud for ditto ... ... (Ceased Ch. No. VA1220)	1	1	1
X151/5	Nut for air intake pipe support stud ... ... (Ceased Ch. No. VA1220)	1	1	1
X151/6	Spring washer for ditto ... ... (Ceased Ch. No. VA1220)	1	1	1
MG795/199	Spring clamp for air intake pipe... (Comm. Ch. No. VA1221)	1	1	1
MG795/198	Bolt for ditto ... ... (Comm. Ch. No. VA1221)	1	1	1
X151/5	Nut for ditto ... ... (Comm. Ch. No. VA1221)	1	1	1
X151/6	Spring washer for ditto ... ... (Comm. Ch. No. VA1221)	1	1	1
A1034	Air cleaner ... ...Ceased Eng. No. TPBG1509	1	1	1
A1101	" " ... ... (Comm. Eng. No. TPBG1510)	1	1	1
MG795/133	Ferrule for ditto (rubber) (Comm. Eng. No. TPBG1510)	1	1	1
A1163	Clip for air cleaner	1	1	1
MG795/195	Support strap for air cleaner (front) ... ... (Comm. Ch. No. VA1221)	1	1	1
MG795/200	Ditto (rear) ... ... (Comm. Ch. No. VA1221)	1	1	1

ALTERATIONS

.....

.....

.....

.....

.....

.....

.....

.....

.....

.....

.....

.....

ENGINE ELECTRICAL EQUIPMENT (illustration on page 19)

A1016	**Dynamo**	1	1	1
A848/1	Terminal block cover assembly...	1	1	1
A848/5	Band cover assembly	1	1	1
A848/6	Drive end bracket with bearing housing	1	1	1
A848/103	Drive end bearing	1	1	1
A1092/1	Commutator end bracket with bush and brush gear (less brushes)	1	1	1
A848/105	Commutator end bearing bush	1	1	1
A1092/2	Lubricator	1	1	1
A1092/100	Armature	1	1	1
A964/103	Nut for shaft	1	1	1
A1016/3	Field coils	1 set	1 set	1 set
A1016/4	Brushes	1 set	1 set	1 set
A1016/5	Brush springs	1 set	1 set	1 set
MG679/225	Dynamo pulley	1	1	1

Part No.	DESCRIPTION	No. Used Saloon	Tourer	Foursome
MG706/427	Support bracket for dynamo	1	1	1
MG679/227	Bolt for ditto	2	2	2
X151/15	Spring washer for ditto	2	2	2
MG679/228	Dynamo adjusting link	1	1	1
MG679/230	Distance tube for ditto	1	1	1
X151/3	Bolt for ditto	1	1	1
X151/28	Spring washer for ditto	1	1	1
P151/151	Swivel bolt for dynamo	2	2	2
X151/16	Nut for ditto	2	2	2
X151/15	Spring washer for ditto	2	2	2
A1017	**Starter** ... ...Ceased Eng. No. TPBG1509	1	1	1
A1103	„ ... ...Comm. Eng. No. TPBG1510	1	1	1
A1017/1	Band cover with nut and screw	1	1	1
A1017/2	Drive end bracket with bush Ceased Eng. No. TPBG1509	1	1	1
A1103/1	Ditto ... ...Comm. Eng. No. TPBG1510	1	1	1
A1017/3	Commutator end bracket with bush and brush gear	1	1	1
A1017/100	Bush for commutator end bracket	1	1	1
A1017/101	Armature	1	1	1
A1017/4	Brushes	1 set	1 set	1 set
A1017/5	Brush springs	1 set	1 set	1 set
A1017/6	Field coils ... ...Ceased Eng. No. TPBG1509	1 set	1 set	1 set
A1103/2	„ „ ... ...Comm. Eng. No. TPBG1510	1 set	1 set	1 set
A1017/7	Pinion and sleeve assembly	1	1	1
A526/101	Main spring	1	1	1
A1017/102	Pinion retaining spring	1	1	1
A1017/103	Grease cap (commutator end)	1	1	1
A1017/8	Starter switch	1	1	1
MG706/213	Joint for starter	1	1	1
X151/3	Bolt for securing starter	3	3	3
X151/28	Spring washer for ditto	3	3	3
MG706/210	Inspection cover for starter	1	1	1
MG706/116	Joint for ditto	1	1	1
P151/178	Screw for securing starter inspection cover ...	3	3	3
X151/21	Spring washer for ditto	3	3	3
A1018	**Distributor**	1	1	1
A961/1	Cover with cable nuts	1	1	1
A739/105	Cable nut for cover	5	5	5
A739/104	Clip for cover	2	2	2
A739/102	Condenser	1	1	1
A739/2	Contact set	1	1	1
A961/100	Rotor	1	1	1
A961/2	Carbon and spring assembly	1	1	1
A739/103	Lubricator	1	1	1
A847/4	Actuating lever with micrometer body and clamp screw	1	1	1
A847/2	Micrometer lever assembly	1	1	1
A847/3	Timing lever and swivel assembly	1	1	1
A961/3	Clamp screw and nut assembly	1	1	1
A961/101	Shaft bearing bush ($\frac{7}{8}$" long)	1	1	1
A961/102	„ „ „ ($\frac{13}{16}$" long)	1	1	1
A961/103	Cam	1	1	1
MG679/233	Screw for distributor	1	1	1
MG679/234	Drive gear for distributor	1	1	1
MG679/235	Pin for ditto	1	1	1
A1104	**Ignition cables**	1 set	1 set	1 set
MG706/212	Rubber spacer for ditto Ceased Eng. No. TPBG1509	1	1	1

ALTERATIONS

.....

.....

.....

.....

.....

.....

.....

.....

.....

.....

.....

.....

.....

ENGINE LUBRICATION DETAILS (illustration on page 20)

MG795/17	**Oil base with baffle**	1	1	1
MG795/176	Baffle for oil base	1	1	1

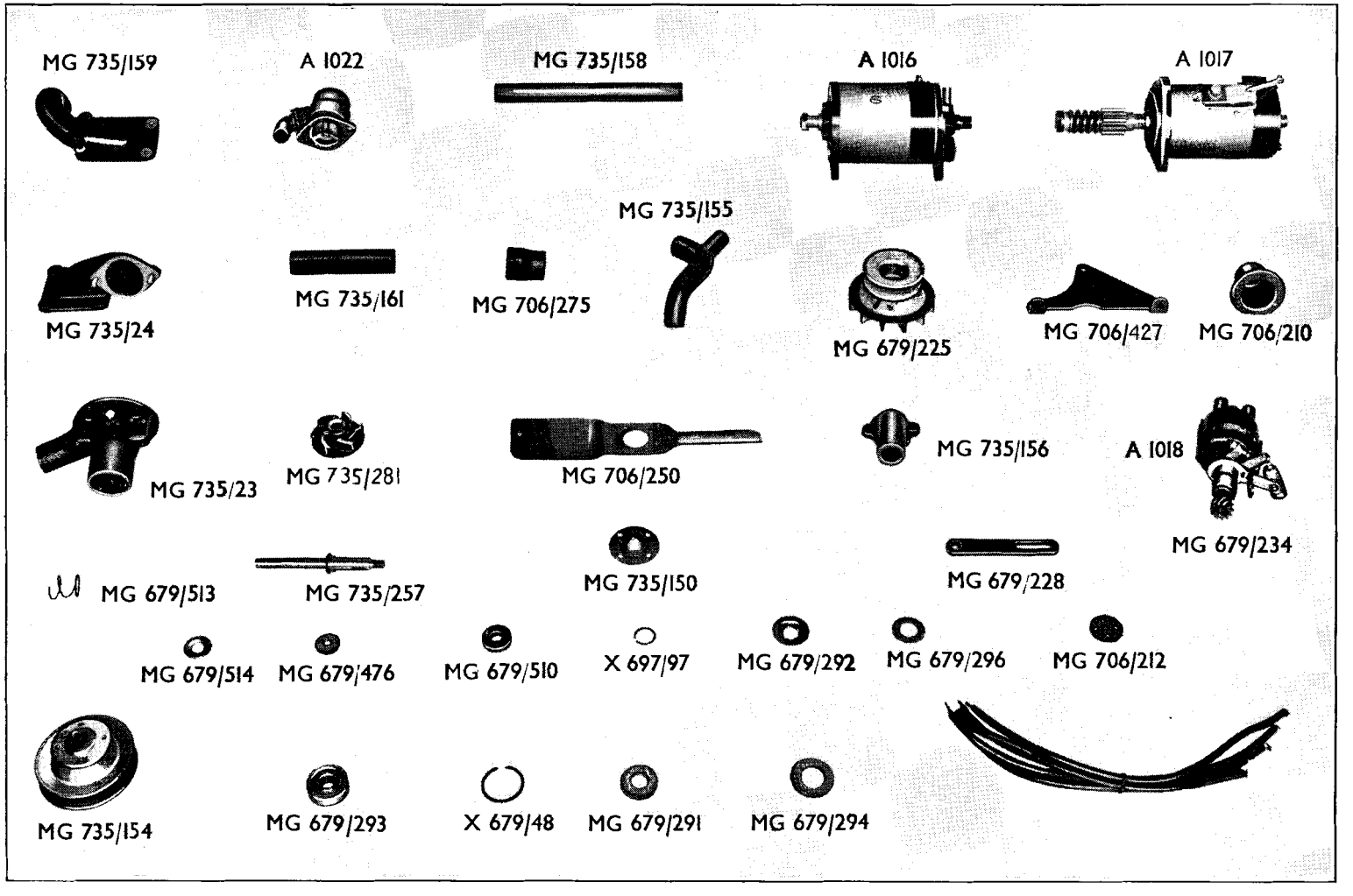
MG 735/159
A 1022
MG 735/158
A 1016
A 1017
MG 735/155
MG 735/24
MG 735/161
MG 706/275
MG 679/225
MG 706/427
MG 706/210
MG 735/23
MG 735/281
MG 706/250
MG 735/156
A 1018
MG 679/234
MG 679/513
MG 735/257
MG 735/150
MG 679/228
MG 679/514
MG 679/476
MG 679/510
X 697/97
MG 679/292
MG 679/296
MG 706/212
MG 735/154
MG 679/293
X 679/48
MG 679/291
MG 679/294

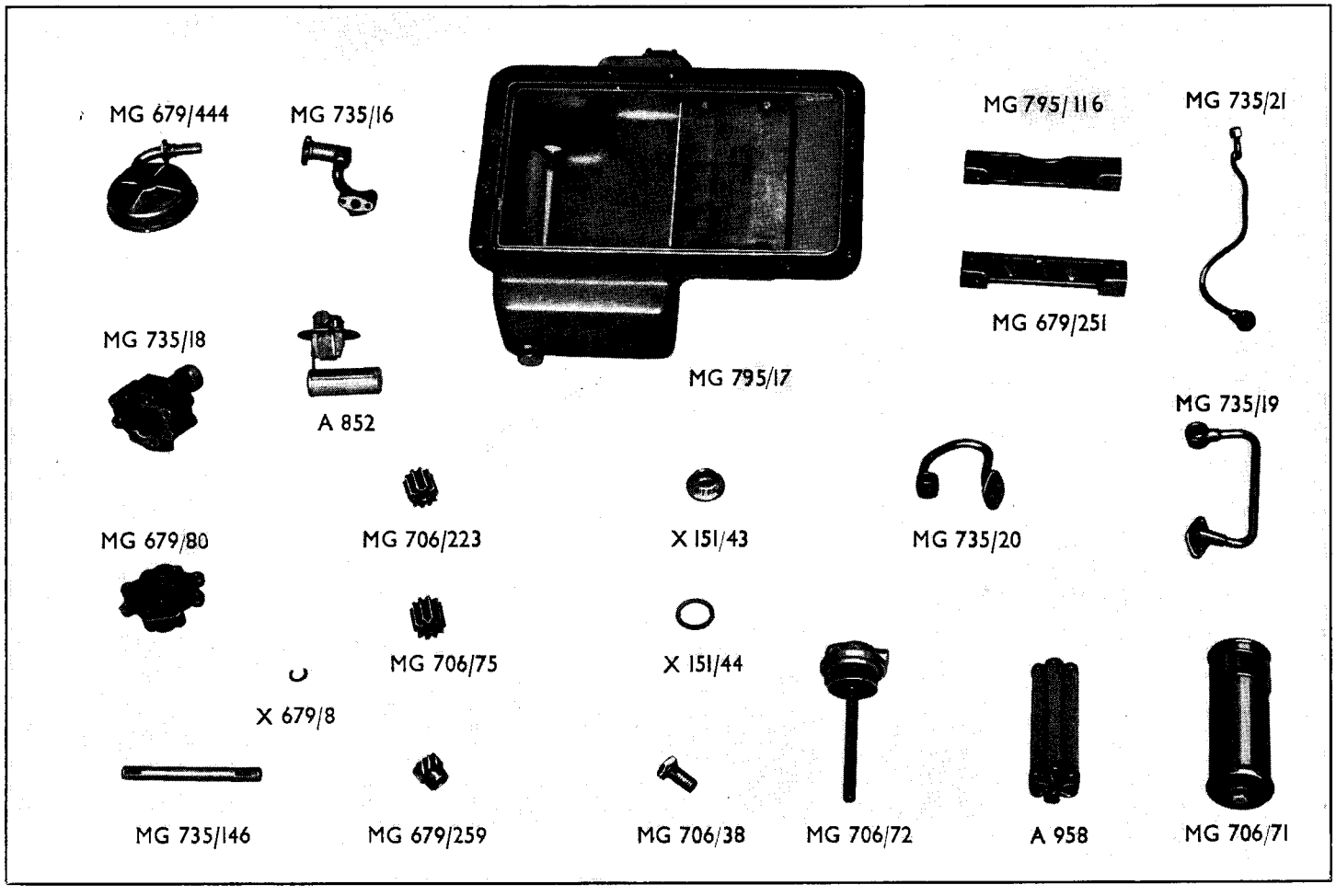
MG 679/444
MG 735/16
MG 795/116
MG 735/21
MG 679/251
MG 735/18
A 852
MG 795/17
MG 735/19
MG 679/80
MG 706/223
X 151/43
MG 735/20
MG 706/75
X 151/44
X 679/8
MG 735/146
MG 679/259
MG 706/38
MG 706/72
A 958
MG 706/71

Part No.	DESCRIPTION	No. Used Saloon	Tourer	Foursome
P151/331	Bolt for baffle	4	4	4
X151/6	Spring washer for ditto	4	4	4
X151/43	Drain plug for oil base	1	1	1
X151/44	Washer for ditto	1	1	1
MG735/138	Joint for oil base	1	1	1
X679/28	Bolt for securing oil base (long)	4	4	4
X151/30	" " " " " (short)	13	13	13
X679/30	Spring washer for ditto	17	17	17
MG735/255	Stud for oil base	1	1	1
X151/16	Nut for ditto	1	1	1
X679/30	Spring washer for ditto	1	1	1
MG795/116	Bearer bar for sump (rear)	1	1	1
MG679/251	" " " " (front)	1	1	1
X679/34	Screw (bearer bar to cylinder block)	4	4	4
X679/35	Bolt (rear bearer bar to bell housing)	2	2	2
X151/19	Screw (oil base to bearer bars)	2	2	2
X151/15	Spring washer for ditto	4	4	4
MG735/53	Dipstick for oil base	1	1	1
A852	Attachment for oil level gauge...	1	1	1
X679/31	Screw for ditto	6	6	6
X679/32	Spring washer for ditto	6	6	6
MG735/16	**Oil suction pipe (sump to pump)** ... Ceased	1	1	1
MG679/249	Joint for ditto ... ... Eng. No.	1	1	1
X679/33	Bolt for securing oil suction pipe TPBG1890	2	2	2
MG795/11	**Oil suction pipe (sump to pump)** ... Comm.	1	1	1
MG795/137	Joint for ditto ... ... Eng. No.	1	1	1
MG795/138	Bolt for securing oil suction pipe TPBG1891	2	2	2
MG679/444	Strainer for oil base	1	1	1
X679/88	Retaining pin for ditto	1	1	1
MG735/17	**Oil pump assembly**	1	1	1
MG735/18	Oil pump body (bushed)	1	1	1
MG795/222	Bush for oil pump body	1	1	1
MG679/80	Oil pump cover with relief valve seat	1	1	1
MG679/264	Seat for oil relief valve	1	1	1
P151/317	Dowel for ditto	2	2	2
MG679/255	Joint for oil pump cover	1	1	1
MG679/19	Oil pump cover plug with relief valve plug Ceased Eng. No. TPBG1509	1	1	1
MG795/118	Relief valve cover plug ... Comm. Eng.	1	1	1
MG795/119	Guide for relief valve ball No. TPBG1510	1	1	1
X679/36	Washer for oil pump cover plug	1	1	1
X679/37	Washer for relief valve plug Ceased Eng. No. TPBG1509	1	1	1
MG735/143	Bolt for oil pump cover (long)	2	2	2
MG735/144	" " " " " (*medium*)	2	2	2
MG735/145	" " " " " (short)	4	4	4
X151/6	Spring washer for ditto	8	8	8
MG735/146	Oil pump shaft	1	1	1
MG679/259	Oil pump shaft gear	1	1	1
P151/185	Key for ditto	1	1	1
MG679/260	Pin for ditto	1	1	1
MG706/223	Oil pump gear (driving)	1	1	1
X679/8	Circlip for ditto	1	1	1
MG706/75	Oil pump gear (driven)	1	1	1
MG706/413	Bush for ditto	1	1	1
MG706/225	Spindle for oil pump driven gear	1	1	1
X151/17	Oil relief valve ball	1	1	1
MG706/226	Spring for ditto Ceased Eng. No. TPBG1509	1	1	1
MG795/177	" " " Comm. Eng. No. TPBG1510	1	1	1
MG735/19	**Oil pipe (pump to filter)** Ceased Eng. No. TPBG1509	1	1	1
MG795/7	**" " (pump to filter)** Comm. Eng. No. TPBG1510	1	1	1
MG679/270	Joint for elbow	1	1	1
X679/61	Bolt for securing oil pipe (pump to filter) ...	2	2	2
MG706/70	**Oil filter assembly** Ceased Eng. No. TPBG1509	1	1	1
MG706/74	**" " "** Comm. Eng. No. TPBG1510	1	1	1
MG706/71	Oil filter container assembly	1	1	1
MG706/72	Oil filter cover assembly Ceased Eng. No. TPBG1509	1	1	1
MG706/89	" " " " Comm. Eng. No. TPBG1510	1	1	1
MG706/399	Rubber washer for ditto	1	1	1
MG706/239	Spring for oil filter cover	1	1	1
MG706/240	Felt washer for ditto	1	1	1
MG706/241	Plate for oil filter element...	1	1	1
MG706/242	Circlip for ditto	1	1	1
A958	**Oil filter element**	1	1	1
MG706/38	Bolt for oil filter banjo with washers Ceased Ch. No. VA1769	2	2	2

Part No.	DESCRIPTION		No. Used Saloon	Tourer	Foursome
MG795/23	Bolt for oil filter banjo with washers Comm. Ch. No. VA1770		1	1	1
MG679/522	Union for oil pressure gauge		1	1	1
P151/110	Washer for ditto		1	1	1
MG706/410	Joint for oil filter	Comm.	1	1	1
MG706/426	Bolt (securing) for oil filter	Eng. No.	2	2	2
X151/15	Spring washer for ditto ...	TPBG1510	2	2	2
MG735/20	**Oil pipe (filter to block)**	Ceased	1	1	1
MG679/249	Joint for elbow	Eng. No.	1	1	1
X679/61	Bolt (securing) for oil pipe (filter to block)	TPBG1509	2	2	2
MG735/21	**Oil feed pipe to cylinder head** ...	Ceased	1	1	1
MG679/274	Union for ditto	Ch. No.	1	1	1
MG679/548	Screw for ditto	VA1769	1	1	1
MG795/25	**Oil feed pipe to cylinder head** ...	Comm. Ch.	1	1	1
MG795/194	Screw for ditto	No. VA1770	1	1	1
MG795/211	Union for cylinder head oil feed pipe Comm. Engine No. TPBG2511		1	1	1
MG679/546	Washer for cylinder head oil feed pipe screw ...		1	1	1
X679/91	Oil feed plug (cylinder head)		1	1	1

ALTERATIONS

.....

.....

.....

.....

.....

.....

.....

.....

.....

.....

.....

.....

WATER PUMP, FAN AND THERMOSTAT (illustration on page 19)

MG706/249	Fan blade	1	1	1
MG706/250	" " (off set)	1	1	1
MG735/150	Cap for fan	1	1	1
MG735/151	Bolt for securing fan	4	4	4
X151/21	Spring washer for ditto	4	4	4
MG735/22	Water pump assembly	1	1	1
MG735/23	Bearing bracket for fan and water pump (bushed)...	1	1	1
MG679/473	Bush for ditto	1	1	1
S1/18	Oil cup for water pump	1	1	1
MG735/281	Water pump rotor	1	1	1
P151/272	Taper pin for ditto	1	1	1
MG735/257	Spindle for water pump	1	1	1
X151/12	Nut for spindle	1	1	1
X679/46	Washer for ditto	1	1	1
MG735/154	Fan pulley	1	1	1
S1/15	Greaser for ditto ... Ceased Ch. No. VA1794	1	1	1
S1/21	" " " ... Comm. Ch. No. VA1795	1	1	1
P151/185	Key for fan pulley	1	1	1
MG679/291	Felt washer for spindle (front)	1	1	1
MG679/292	Cover for ditto	1	1	1
MG679/293	Bearing for spindle	1	1	1
X679/48	Circlip for ditto	1	1	1
MG679/294	Felt washer for spindle (rear)	1	1	1
MG679/295	Retaining cover for ditto (front)	1	1	1
MG679/296	Retaining washer for ditto (rear)...	1	1	1
MG679/476	Seal for water pump spindle (rubber)	1	1	1
X679/97	Circlip for ditto	1	1	1
MG679/513	Spring for ditto	1	1	1
MG679/514	Collar for ditto	1	1	1
MG679/510	Carbon sealing washer for water pump spindle ...	1	1	1
MG679/512	Peg for ditto	1	1	1
MG679/302	Joint for water pump body	1	1	1
X151/30	Bolt for securing water pump	2	2	2
X679/49	Extension nut for securing water pump ...	2	2	2
X151/15	Spring washer for ditto	4	4	4
MG735/155	Water pump connecting pipe	1	1	1
MG706/275	Hose for ditto	1	1	1
A1217	Clip for ditto (small)	1	1	1
A1215	" " " (large)	1	1	1

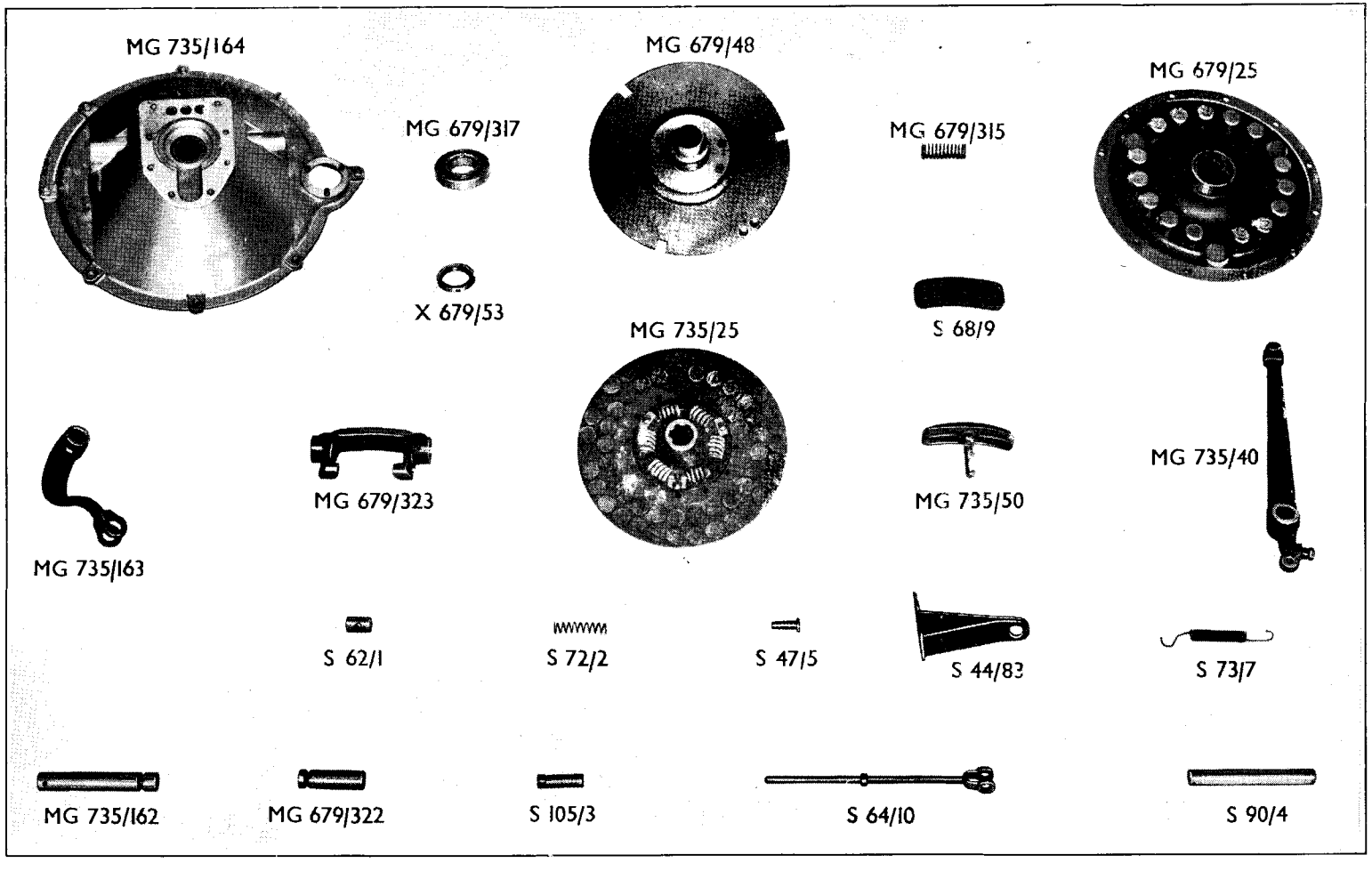
MG 735/164
MG 679/317
MG 679/48
MG 679/315
MG 679/25
X 679/53
S 68/9
MG 735/25
MG 735/163
MG 679/323
MG 735/50
MG 735/40
S 62/1
S 72/2
S 47/5
S 44/83
S 73/7
MG 735/162
MG 679/322
S 105/3
S 64/10
S 90/4

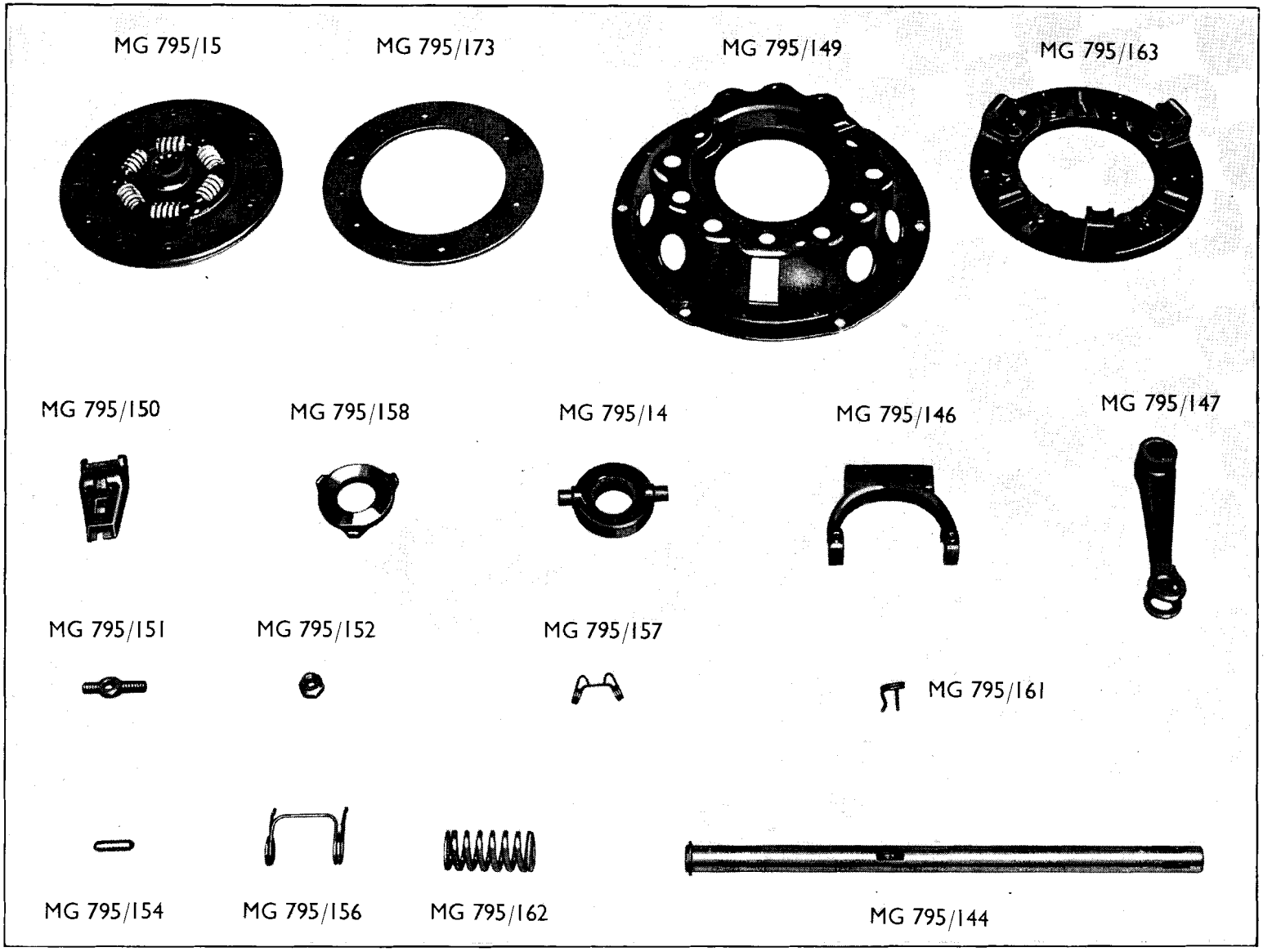
MG 795/15
MG 795/173
MG 795/149
MG 795/163
MG 795/150
MG 795/158
MG 795/14
MG 795/146
MG 795/147
MG 795/151
MG 795/152
MG 795/157
MG 795/161
MG 795/154
MG 795/156
MG 795/162
MG 795/144

Part No.	DESCRIPTION	No. Used Saloon	Tourer	Foursome
MG735/156	Water outlet elbow (block)	1	1	1
MG735/157	Joint for ditto	1	1	1
X151/30	Bolt for ditto	2	2	2
X151/15	Spring washer for ditto	2	2	2
MG735/158	Water inlet pipe	1	1	1
MG706/275	Hose for ditto	2	2	2
A1217	Clip for ditto	2	2	2
MG735/159	Water inlet elbow (head)	1	1	1
MG679/185	Joint for ditto	1	1	1
X151/16	Nut for ditto	2	2	2
X151/15	Spring washer for ditto	2	2	2
MG735/24	Water outlet pipe with studs for thermostat ...	1	1	1
X151/45	Stud for thermostat	2	2	2
MG679/308	Joint for water outlet pipe	1	1	1
X151/30	Bolt for securing water outlet pipe	4	4	4
X151/15	Spring washer for ditto	4	4	4
A1022	Thermostat	1	1	1
MG679/305	Joint for ditto	1	1	1
X151/16	Nut for securing thermostat	2	2	2
X151/15	Spring washer for ditto	2	2	2
MG735/161	By-pass hose for thermostat	1	1	1
A1216	Clip for ditto	2	2	2
MG679/309	Drive belt for fan and dynamo	1	1	1

ALTERATIONS

.....

.....

.....

.....

.....

.....

.....

.....

.....

.....

.....

.....

CLUTCH DETAILS

MG679/25	Clutch cover-plate with gauzes and thimbles for springs		1	1	1
MG679/312	Thimbles for clutch springs ...		15	15	15
X679/51	Screw for securing clutch cover ...		12	12	12
X151/15	Spring washer for ditto		12	12	12
MG679/48	Clutch pressure plate assembly... ...		1	1	1
MG679/315	Clutch spring...		15	15	15
MG679/316	Stop washer for clutch cover ...		1	1	1
MG679/317	Clutch thrust race		1	1	1
X679/53	Nut for ditto	Ceased	1	1	1
MG735/25	Clutch driven plate assembly with corks	Eng. No.	1	1	1
X151/40	Cork inserts for clutch driven plate	TPBG1509	56	56	56
MG735/162	Clutch withdrawal shaft O/S ...		1	1	1
MG679/322	" " " N/S ...		1	1	1
MG679/323	Clutch fork		1	1	1
X679/55	Key for ditto		1	1	1
X679/56	Screw for ditto		2	2	2
MG735/163	Clutch operating lever		1	1	1
P151/185	Key for ditto		1	1	1
X151/25	Taper pin for ditto		1	1	1
MG795/149	Clutch cover		1	1	1
MG795/150	Clutch release lever		3	3	3
MG795/151	Eyebolt for ditto		3	3	3
MG795/152	Nut for ditto		3	3	3
MG795/154	Fulcrum pin for release lever ...		3	3	3
MG795/155	Strut for release lever		3	3	3
MG795/156	Anti-rattle spring for release lever	Comm.	3	3	3
MG795/157	Retaining spring for release lever	Eng. No.	3	3	3
MG795/158	Release lever plate	TPBG1510	1	1	1
MG795/14	Clutch release bearing and cup assembly		1	1	1
MG795/161	Retainer for ditto		2	2	2
MG795/162	Clutch springs		6	6	6
MG795/163	Clutch pressure plate		1	1	1
MG795/15	Clutch driven plate assembly		1	1	1
MG795/173	Facing for clutch driven plate ...		2	2	2
MG795/174	Rivets for ditto		12	12	12

Part No.	DESCRIPTION		No. Used Saloon	Tourer	Foursome
X151/19	Bolt for clutch cover		6	6	6
X151/15	Spring washer for ditto		6	6	6
MG795/144	Clutch withdrawal shaft		1	1	1
MG795/145	Circlip for ditto	Comm.	1	1	1
MG795/146	Clutch fork	Eng. No.	1	1	1
X151/8	Key for ditto	TPBG1510	1	1	1
X706/4	Taper pin for ditto		1	1	1
MG795/147	Clutch operating lever		1	1	1
P151/185	Key for ditto		1	1	1
X151/25	Taper pin for ditto		1	1	1
MG735/40	Clutch pedal with bush		1	1	1
MG706/102	Bush for clutch pedal		1	1	1
MG735/50	Pad and rod for clutch pedal		1	1	1
X151/3	Bolt for clutch pedal pad		1	1	1
X151/28	Spring washer for ditto		1	1	1
S90/4	Shaft for clutch and brake pedals		1	1	1
S44/83	Support bracket for ditto		1	1	1
S64/10	Clutch operating rod Ceased Eng. No. TPBG1509		1	1	1
S64/12	" " " Comm. Eng. No. TPBG1510		1	1	1
S62/1	Trunnion for ditto		1	1	1
S72/2	Adjuster spring for ditto		1	1	1
S105/3	Adjuster nut for ditto		1	1	1
S47/5	Clevis pin (clutch operating rod to lever) ...		1	1	1
S73/7	Return spring for clutch pedal		1	1	1
S44/68	Anchor bracket for ditto		1	1	1
S68/9	Rubber pad for clutch pedal		1	1	1
S68/33	Fume excluder for clutch pedal		1	1	1

ALTERATIONS

.....

.....

.....

.....

.....

.....

.....

.....

.....

.....

.....

.....

GEARBOX DETAILS

MG735/26	Gearbox assembly Ceased Eng. No. TPBG1509		1	1	1
MG795/8	" " Comm. Eng. No. TPBG1510		1	1	1
MG735/164	Clutch housing	Ceased	1	1	1
X679/63	Core plug for ditto	Eng. No.	1	1	1
MG735/165	Joint for clutch housing	TPBG1509	1	1	1
MG795/12	Clutch housing with bushes and T.D.C. indicator		1	1	1
MG795/141	Bush for clutch operating shaft ...	Comm.	2	2	2
MG795/142	T.D.C. indicator (in clutch housing)	Eng. No.	1	1	1
MG795/143	Rivet for ditto	TPBG1510	2	2	2
MG795/148	Clutch inspection cover		1	1	1
MG706/270	Screw for ditto		2	2	2
X151/3	Bolt for securing clutch housing		8	8	8
X151/28	Spring washer for ditto		8	8	8
MG735/27	Gearbox casing (studded)		1	1	1
X151/45	Stud for gearbox top cover		6	6	6
X151/16	Nut for ditto		6	6	6
X151/15	Spring washer for ditto		6	6	6
MG706/376	Stud for gearbox rear cover (large)		3	3	3
X151/27	Nut for ditto...		3	3	3
X151/28	Spring washer for ditto		3	3	3
MG679/400	Stud for gearbox rear cover (small)		3	3	3
X151/16	Nut for ditto		3	3	3
X151/15	Spring washer for ditto		3	3	3
X151/43	Drain plug for gearbox		1	1	1
X151/44	Washer for ditto		1	1	1
P151/151	Bolt for securing gearbox to clutch housing ...		8	8	8
X679/30	Spring washer for ditto		8	8	8
MG706/49	Oil level dipstick for gearbox		1	1	1
MG735/168	First motion shaft Ceased Eng. No. TPBG1509		1	1	1
MG795/122	" " " Comm. Eng. No. TPBG1510		1	1	1
MG735/169	Bearing for ditto		1	1	1
MG735/170	Circlip for bearing		1	1	1

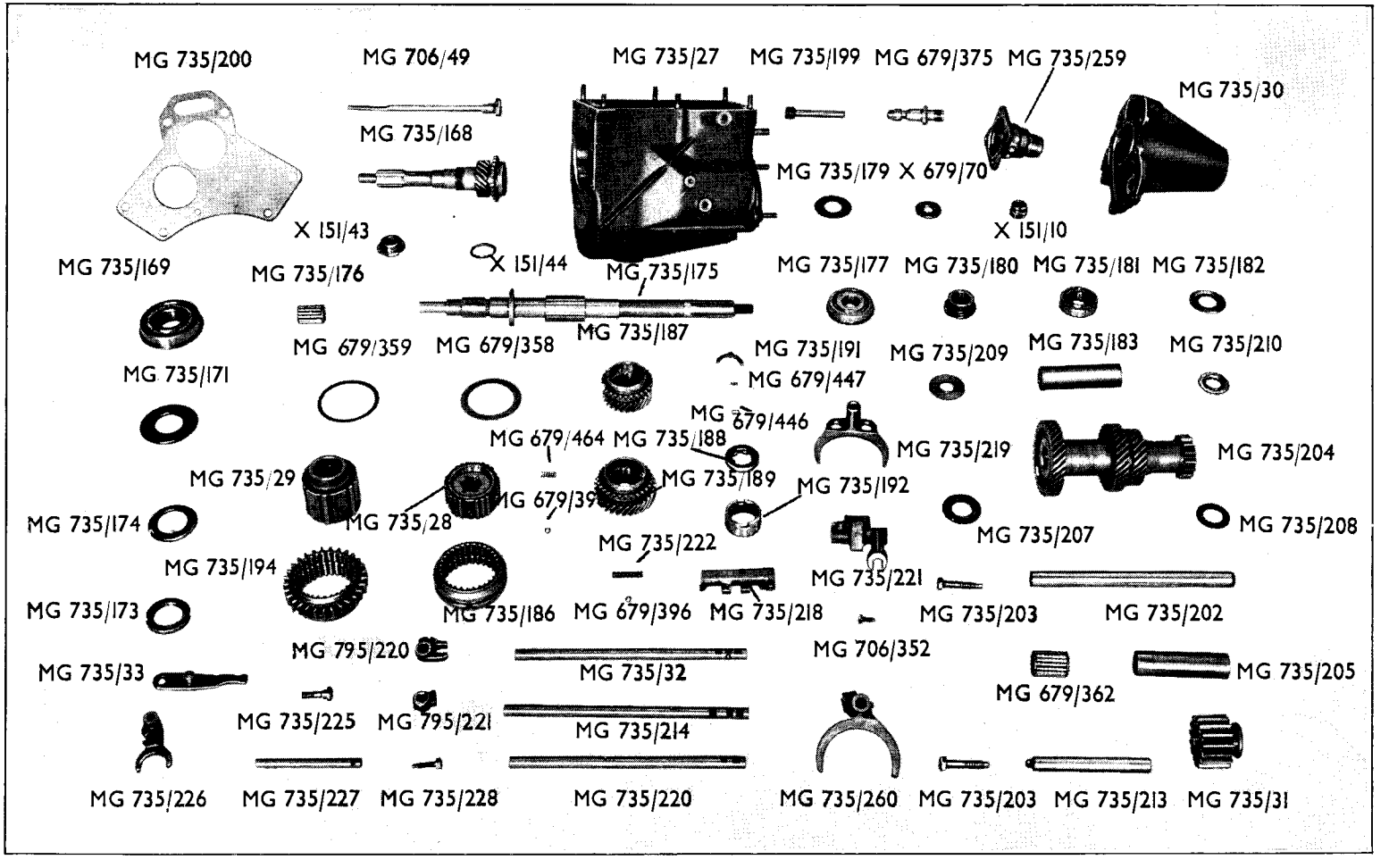
MG 735/200
MG 706/49
MG 735/27
MG 735/199
MG 679/375
MG 735/259
MG 735/30
MG 735/168
MG 735/179
X 679/70
X 151/43
X 151/10
MG 735/169
MG 735/176
X 151/44
MG 735/175
MG 735/177
MG 735/180
MG 735/181
MG 735/182
MG 679/359
MG 679/358
MG 735/187
MG 735/191
MG 735/209
MG 735/183
MG 735/210
MG 735/171
MG 679/447
MG 679/446
MG 679/464
MG 735/188
MG 735/219
MG 735/204
MG 735/29
MG 735/189
MG 735/192
MG 735/174
MG 735/28
MG 679/39
MG 735/207
MG 735/208
MG 735/222
MG 735/194
MG 735/221
MG 735/173
MG 735/186
MG 679/396
MG 735/218
MG 735/203
MG 735/202
MG 795/220
MG 706/352
MG 735/33
MG 735/32
MG 679/362
MG 735/205
MG 735/225
MG 795/221
MG 735/214
MG 735/226
MG 735/227
MG 735/228
MG 735/220
MG 735/260
MG 735/203
MG 735/213
MG 735/31

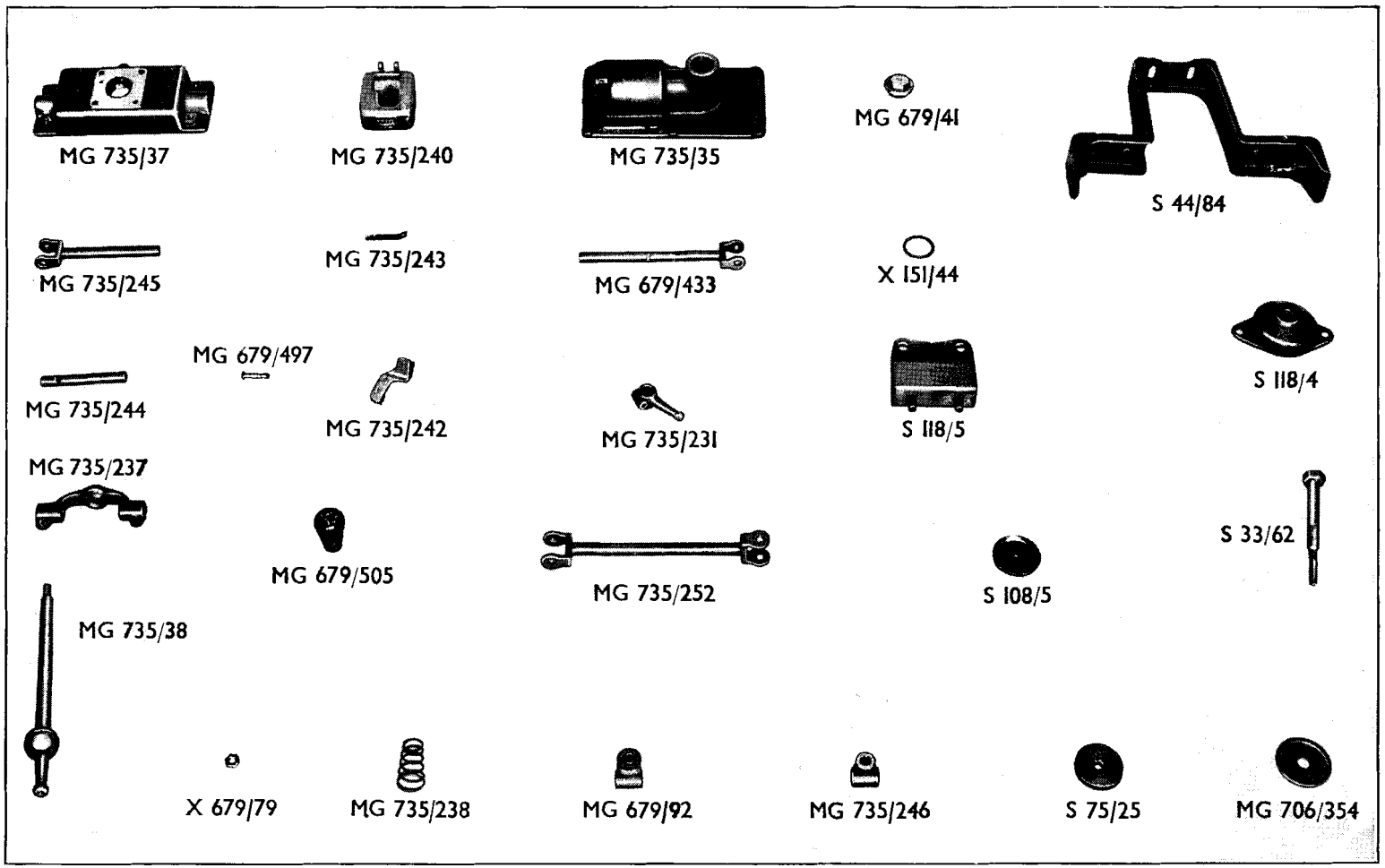
MG 735/37
MG 735/240
MG 735/35
MG 679/41
S 44/84
MG 735/245
MG 735/243
MG 679/433
X 151/44
MG 679/497
MG 735/244
MG 735/242
MG 735/231
S 118/5
S 118/4
MG 735/237
MG 679/505
MG 735/252
S 108/5
S 33/62
MG 735/38
X 679/79
MG 735/238
MG 679/92
MG 735/246
S 75/25
MG 706/354

Part No.	DESCRIPTION	No. Used Saloon	Tourer	Foursome
MG735/171	Guard for bearing	1	1	1
MG679/358	Plate for bearing	1	1	1
MG679/359	Spring plate for bearing	1	1	1
MG735/173	Nut for first motion shaft bearing	1	1	1
MG735/174	Lock washer for ditto	1	1	1
MG706/305	Oil seal for first motion shaft	1	1	1
MG735/175	Mainshaft ... Ceased Eng. No. TPBG1509	1	1	1
MG795/189	„ ... Comm. Eng. No. TPBG1510	1	1	1
MG735/176	Front spigot bearing for ditto	1	1	1
MG735/177	Bearing for mainshaft (intermediate)	1	1	1
MG735/178	Circlip for bearing	1	1	1
MG735/179	Guard for bearing	1	1	1
MG706/322	Plate for bearing	1	1	1
MG706/323	Spring plate for bearing	1	1	1
MG735/180	Speedometer gear (driving)	1	1	1
MG735/181	Bearing for mainshaft (rear)	1	1	1
MG735/182	Guard for ditto	1	1	1
MG735/183	Distance tube for mainshaft bearings	1	1	1
MG735/28	Mainshaft sliding hub (top and 3rd) (with synchronising cones) (female) Ceased Eng. No. TPBG1509	1	1	1
MG795/21	Ditto (top and 3rd) (with synchronising cones) (female) Comm. Eng. No. TPBG1510	1	1	1
MG735/186	Mainshaft striking dog (top and 3rd) ... ... Ceased Eng. No. TPBG2236	1	1	1
MG795/202	Mainshaft striking dog (top and 3rd) ... ... Comm. Eng. No. TPBG2237	1	1	1
MG679/396	Ball for ditto		As required	
MG679/464	Spring for ditto Ceased Eng. No. TPBG1509	6	6	6
MG795/125	„ „ „ Comm. Eng. No. TPBG1510	4	4	4
MG735/187	Mainshaft 3rd speed gear (constant mesh) Ceased Eng. No. TPBG1509	1	1	1
MG795/126	Ditto (constant mesh) Comm. Eng. No. TPBG1510	1	1	1
MG706/316	Rollers for ditto		As required	
MG735/188	Locking plate for ditto Ceased Eng. No. TPBG1509	1	1	1
MG795/127	Ditto ... Comm. Eng. No. TPBG1510	1	1	1
MG679/446	Plunger for locking plate	1	1	1
MG679/447	Spring for ditto	1	1	1
MG735/189	Mainshaft 2nd speed gear (constant mesh) ...	1	1	1
MG735/190	Rollers for ditto	22	22	22
MG735/191	Washer for ditto	2	2	2
MG735/192	Locking collar for 2nd speed gear	1	1	1
MG679/446	Plunger for locking collar	1	1	1
MG679/447	Spring for ditto	1	1	1
MG735/29	Mainshaft sliding hub (1st and 2nd) (with synchronising cone) (female)	1	1	1
MG735/194	Mainshaft 1st speed gear Ceased Eng. No. TPBG2236	1	1	1
MG795/203	Mainshaft 1st speed gear Comm. Eng. No. TPBG2237	1	1	1
MG679/396	Ball for ditto	6	6	6
MG735/195	Spring for ditto	6	6	6
MG735/259	Propeller shaft flange	1	1	1
X151/10	Nut for ditto	1	1	1
X679/70	Washer for ditto	1	1	1
MG735/197	Oil seal for mainshaft (rear)	1	1	1
MG735/30	Gearbox rear cover with speedometer pinion and bush	1	1	1
MG735/199	Speedometer pinion	1	1	1
MG679/375	Bush for ditto	1	1	1
X679/68	Screw for ditto	2	2	2
MG735/201	Joint for gearbox rear cover	2	2	2
MG735/200	Engine rear bearer plate	1	1	1
MG735/202	Layshaft	1	1	1
MG735/203	Locating screw for ditto	1	1	1
X151/15	Spring washer for ditto	1	1	1
MG735/204	Layshaft gear unit	1	1	1
MG679/362	Bearing for ditto	2	2	2
MG735/205	Spacer tube for bearings	1	1	1
MG735/51	Layshaft bearing plate assembly (front) ...	1	1	1
MG735/52	„ „ „ „ (rear)	1	1	1
MG735/31	Reverse gear (driven) with bush	1	1	1
MG735/212	Bush for reverse gear	1	1	1
MG735/213	Reverse shaft	1	1	1
MG679/387	Plug for ditto	1	1	1

Part No.	DESCRIPTION	No. Used Saloon	Tourer	Foursome
MG735/203	Screw for reverse shaft	1	1	1
X151/15	Spring washer for ditto	1	1	1
MG735/214	Selector shaft (1st and 2nd) ... ... Ceased Eng. No. TPBG2236	1	1	1
MG795/205	Selector shaft (1st and 2nd) Comm. Eng. No. TPBG2237	1	1	1
MG735/260	Selector fork (1st and 2nd)	1	1	1
MG795/221	Second speed stop (on 1st and 2nd selector shaft)	1	1	1
MG735/32	Selector shaft (3rd and top) ... ... Ceased Eng. No. TPBG2236	1	1	1
MG795/24	Selector shaft (3rd and top) Comm. Eng. No. TPBG2237	1	1	1
MG735/218	Gear selector (3rd and top)	1	1	1
MG735/219	Gear operating fork (3rd and top)	1	1	1
MG735/220	Selector shaft (reverse) Ceased Eng. No. TPBG1509	1	1	1
MG795/128	Ditto (reverse) Comm. Eng. No. TPBG1510 Ceased Eng. No. TPBG2236	1	1	1
MG795/206	Selector shaft (reverse) Comm. Eng. No. TPBG2237	1	1	1
MG795/220	Steady for ditto	1	1	1
MG735/221	Gear selector (reverse) Ceased Eng. No. TPBG1509	1	1	1
MG795/129	Ditto (reverse)	1	1	1
MG795/130	Plunger for ditto ... ... Comm.	1	1	1
MG679/395	Spring for ditto ... ... Eng. No.	1	1	1
MG679/396	Ball for reverse plunger TPBG1510	1	1	1
MG679/397	Spring for ditto	1	1	1
MG706/352	Screw for selector shafts	6	6	6
MG679/396	Ball for selector shafts	3	3	3
MG735/222	Spring for ditto Ceased Eng. No. TPBG2236 ...	3	3	3
MG795/207	" " " Comm. Eng. No. TPBG2237 ...	1	1	1
MG679/396	Gear change interlock ball...	2	2	2
MG706/140	Plug for interlock hole	1	1	1
MG735/33	Operating link for reverse gear with pin ...	1	1	1
MG735/225	Fulcrum pin for ditto	1	1	1
MG706/256	Nut for ditto...	1	1	1
MG679/506	Washer for ditto	1	1	1
MG735/226	Gear operating fork (reverse)	1	1	1
MG735/227	Shaft for ditto	1	1	1
MG735/228	Screw for ditto	1	1	1
X151/6	Spring washer for ditto	1	1	1
MG735/34	Gearbox top cover assembly	1	1	1
MG735/35	Gearbox top cover with bushes	1	1	1
MG679/408	Bush for gearbox top cover (front)	1	1	1
MG735/230	" " " " " (rear)	1	1	1
MG679/433	Gear change operating shaft	1	1	1
MG735/231	Lever (selector)	1	1	1
P151/549	Key for ditto	1	1	1
X679/83	Bolt for selector lever	1	1	1
X151/6	Spring washer for ditto	1	1	1
MG679/41	Gearbox oil filler plug	1	1	1
X151/44	Washer for ditto	1	1	1
MG735/232	Joint for gearbox top cover	1	1	1

ALTERATIONS

.....

.....

.....

.....

.....

.....

.....

.....

.....

.....

.....

.....

GEARBOX REMOTE CONTROL (illustration on page 28)

MG735/36	Gearbox remote control assembly	1	1	1
MG735/37	Change speed lever ball housing with bushes ...	1	1	1
MG679/408	Bush for change speed lever ball housing ...	2	2	2
MG735/38	Change speed lever with ball	1	1	1
MG735/237	Cradle for change speed lever	1	1	1

Part No.	DESCRIPTION	No. Used Saloon	Tourer	Foursome
MG735/238	Spring for change speed lever	1	1	1
MG679/505	Knob for change speed lever	1	1	1
X679/79	Lock nut for ditto	1	1	1
MG735/239	Snug for change speed lever	1	1	1
MG735/240	Change speed gate	1	1	1
MG735/241	Bolt for ditto	4	4	4
X151/6	Spring washer for ditto	4	4	4
MG735/242	Reverse catch	1	1	1
MG679/497	Pin for ditto	1	1	1
X679/101	Circlip for ditto	1	1	1
MG735/243	Spring for reverse catch	1	1	1
X679/84	Screw for ditto	1	1	1
MG735/244	Change speed control shaft (plain)	1	1	1
MG735/245	" " " " (forked)	1	1	1
P151/549	Key for ditto	1	1	1
X679/83	Pinch bolt for control shaft	2	2	2
X151/6	Spring washer for ditto	2	2	2
MG735/252	Connecting rod (remote control to gearbox) ...	1	1	1
MG679/92	Silentbloc for ditto (with housing)	1	1	1
S17/17	Silentbloc for ditto	1	1	1
MG735/246	Lug for connecting rod	1	1	1
X679/86	Bolt for connecting rod	4	4	4
X679/79	Lock nut for ditto	8	8	8

ALTERATIONS

.....

.....

.....

.....

.....

.....

ENGINE MOUNTING (illustration on page 28)

S118/4	Engine front support block	2	2	2
S75/25	Rubber washer for front engine mounting ...	2	2	2
S108/5	Retainer for ditto	2	2	2
MG706/354	Disc for front engine mounting	2	2	2
S33/62	Special bolt for front engine mounting	2	2	2
S118/5	Engine rear support block	2	2	2
MG736	Engine front tie strip assembly } Ceased Ch.	2	2	2
S56/33	Clamp plate for ditto ... } No. VA1253	2	2	2
S118/6	Engine front steady rubber Comm. Ch. No. VA1254	2	2	2

ALTERATIONS

.....

.....

.....

.....

.....

.....

BRAKE GEAR, CROSS SHAFT LEVER AND PEDAL (illustration on page 33)

MG737	**Hand brake cross shaft assembly**	1	1	1
MG738	Bearing for ditto	2	2	2
S54/7	Packing piece for bearings...	2	2	2
S73/6	Return spring for hand brake cross shaft ...	1	1	1
S49/20	Clip for ditto	1	1	1
MG739	**Hand brake lever assembly**	1	1	1
MG739/1	Hand brake lever (bushed) with tube	1	1	1
MG655/100	Bush for hand brake lever	1	1	1
MG690/101	Hand brake pawl stud	1	1	1
MG739/101	Hand brake ratchet pawl	1	1	1
856	Screw for ditto	2	2	2
852	Spring for hand brake pawl rod	1	1	1
MG739/2	Hand brake pawl rod (flexible) with screw for knob	1	1	1
849	Knob for hand brake lever	1	1	1
MG488/104	Hand brake adjusting rod	1	1	1
851	Clevis pin for ditto	1	1	1
S105/1	Adjuster nut for hand brake	1	1	1
S55/15	Collar for cross shaft	1	1	1
S31/5	Grub screw for ditto	1	1	1
S93/4	Hand brake ratchet...	1	1	1
MG735/42	Brake pedal with bush	1	1	1
MG706/102	Bush for brake pedal	1	1	1
MG735/50	Pad and rod for brake pedal	1	1	1

Part No.	DESCRIPTION	No. Used Saloon	Tourer	Foursome
X151/3	Bolt for ditto	1	1	1
X151/28	Spring washer for ditto	1	1	1
S73/7	Return spring for brake pedal	1	1	1
S68/9	Rubber pad for brake pedal	1	1	1
S68/8	Fume excluder for brake pedal	1	1	1
S69/1	Retainer for ditto	1	1	1

ALTERATIONS

.....

.....

.....

.....

.....

.....

BRAKE GEAR (LOCKHEED HYDRAULIC) (illustration on page 33)

MG740/2	**Supply tank complete**	1	1	1
MG740/3	Supply tank body complete	1	1	1
MG661/101	Outlet fitting for supply tank	1	1	1
X661/1	Nut for ditto	1	1	1
X661/2	Washer for ditto	1	1	1
MG740/101	Clamp for supply tank	1	1	1
X740/1	Bolt for ditto	1	1	1
X661/4	Nut for ditto	1	1	1
X661/5	Spring washer for ditto	1	1	1
MG700/104	Filler cap for supply tank	1	1	1
MG700/105	Washer for ditto	1	1	1
MG740/4	**Pipe (supply tank to master cylinder)**	1	1	1
MG661/4	**Master cylinder complete**	1	1	1
MG661/107	Master cylinder barrel	1	1	1
MG661/108	Inlet connector for master cylinder	1	1	1
MG661/109	Bolt for ditto	1	1	1
MG661/110	Washer for ditto	2	2	2
MG661/111	Outlet connector for master cylinder	1	1	1
MG661/102	Washer for ditto (small)	1	1	1
MG661/112	„ „ „ (large)	1	1	1
MG661/113	Bolt for outlet connection	1	1	1
MG661/114	Washer for master cylinder valve	1	1	1
MG661/115	Cup for master cylinder valve	1	1	1
MG661/116	Valve body for master cylinder	1	1	1
MG661/117	Return spring for master cylinder piston ...	1	1	1
MG661/118	Retainer for ditto	1	1	1
MG661/119	Cup for master cylinder piston	1	1	1
MG661/120	Piston for master cylinder	1	1	1
MG661/121	Secondary cup for ditto	1	1	1
MG661/122	Piston stop	1	1	1
MG661/123	Spring retainer for piston stop	1	1	1
MG661/124	Push rod for piston...	1	1	1
MG661/125	End boot for master cylinder	1	1	1
S48/3	Yoke end for master cylinder	1	1	1
S38/5	Lock nut for ditto	1	1	1
S47/5	Clevis pin for ditto	1	1	1
S79/5	Shield for master cylinder	1	1	1
MG740/5	**Pipe (master cylinder to O/S front hose)**	1	1	1
MG740/6	**„ (master cylinder to three-way union)**	1	1	1
MG700/125	Three-way union	1	1	1
MG661/6	**Pipe (three-way union to N/S front hose)**	1	1	1
MG661/132	Front hose complete	2	2	2
MG661/133	Union for ditto	2	2	2
X661/6	Nut for hose union	2	2	2
X661/7	Spring washer for ditto	2	2	2
S44/86	Bracket for front hose O/S	1	1	1
S44/87	„ „ „ „ N/S	1	1	1
MG740/7	**Pipe (three-way union to rear hose)**	1	1	1
MG740/108	Rear hose complete	1	1	1
MG661/133	Union for ditto	1	1	1
X661/6	Nut for hose union	1	1	1
X661/7	Spring washer for ditto	1	1	1
MG661/136	Bracket for rear hose	1	1	1
MG740/8	**Pipe (rear hose to O/S rear wheel cylinder)**	1	1	1
MG740/9	**„ (rear hose to N/S rear wheel cylinder)**	1	1	1
S2/58	Clip (supply pipe to engine shield)	1	1	1
S2/43	„ (pipes to dash bolts and engine rear cross tube)	4	4	4
S2/71	„ (pipes to side member N/S)	5	5	5
S2/52	„ (pipes to rear axle) Ceased Ch. No. VA1254	2	2	2

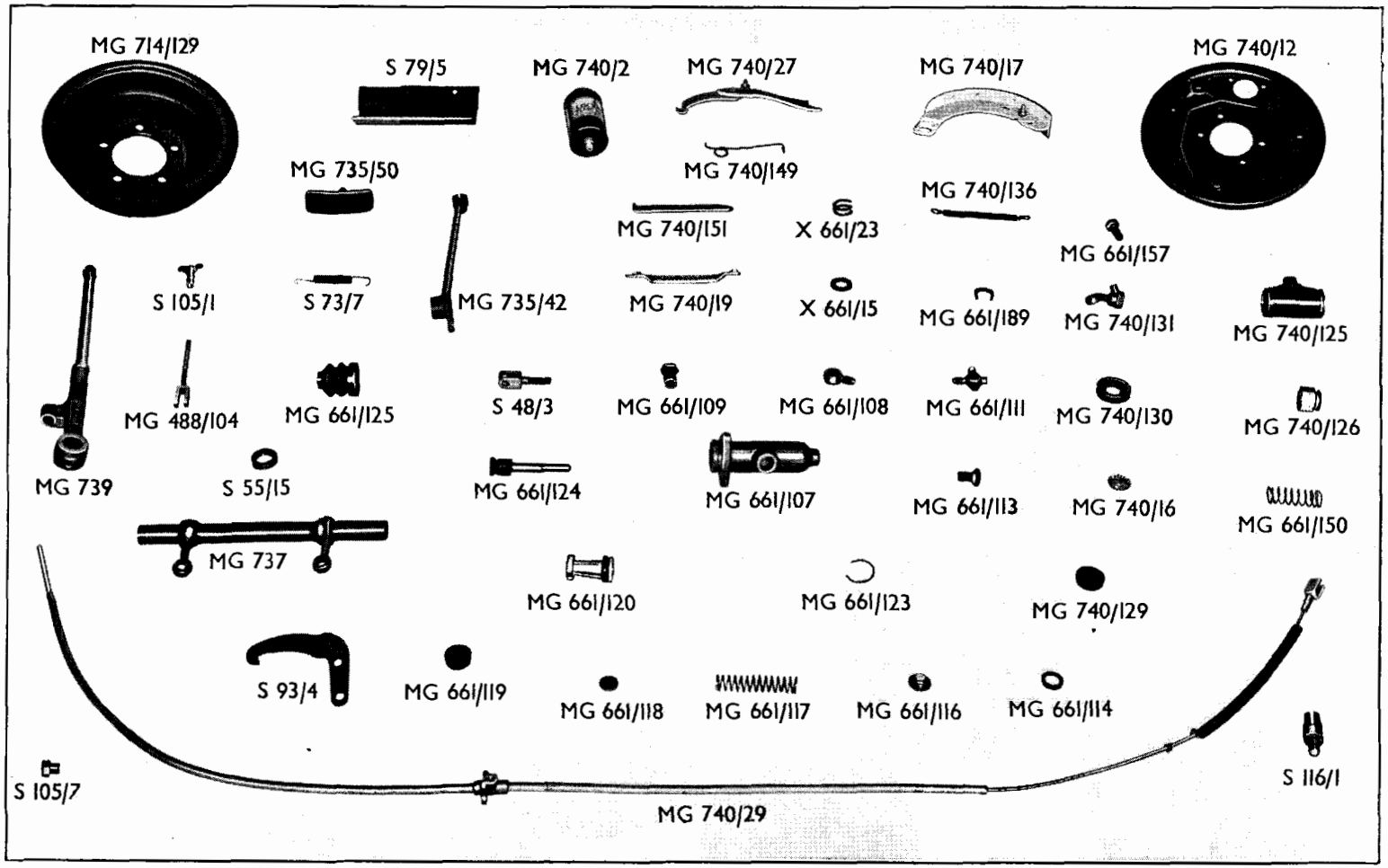
MG 714/129
S 79/5
MG 740/2
MG 740/27
MG 740/17
MG 740/12
MG 735/50
MG 740/149
MG 740/136
MG 740/151
X 661/23
MG 661/157
S 105/1
S 73/7
MG 735/42
MG 740/19
X 661/15
MG 661/189
MG 740/131
MG 740/125
MG 488/104
MG 661/125
S 48/3
MG 661/109
MG 661/108
MG 661/111
MG 740/130
MG 740/126
MG 739
S 55/15
MG 661/124
MG 661/107
MG 661/113
MG 740/16
MG 661/150
MG 737
MG 661/120
MG 661/123
MG 740/129
S 93/4
MG 661/119
MG 661/118
MG 661/117
MG 661/116
MG 661/114
S 105/7
S 116/1
MG 740/29

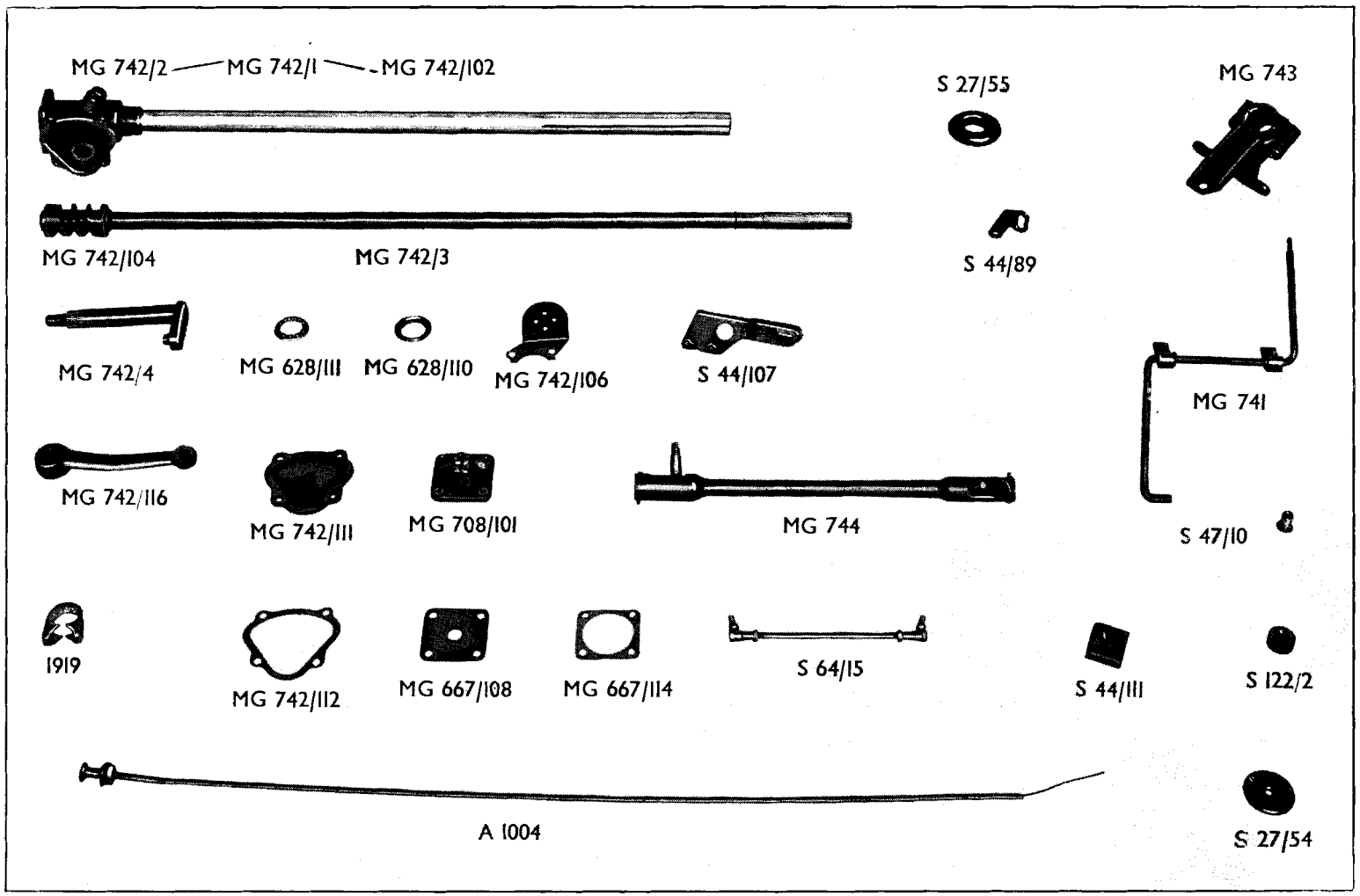
MG 742/2
MG 742/1
MG 742/102
S 27/55
MG 743
MG 742/104
MG 742/3
S 44/89
MG 742/4
MG 628/111
MG 628/110
MG 742/106
S 44/107
MG 741
MG 742/116
MG 742/111
MG 708/101
MG 744
S 47/10
1919
MG 742/112
MG 667/108
MG 667/114
S 64/15
S 44/111
S 122/2
A 1004
S 27/54

Part No.	DESCRIPTION	No. Used Saloon	Tourer	Foursome
S2/40	Pipe strap to rear axle Comm. Ch. No. VA1255	1	1	1
MG740/12	**Front brake anchor bracket assembly O/S** (less shoes and operating gear)	1	1	1
MG740/13	**Ditto N/S** (less shoes and operating gear)	1	1	1
MG661/140	Steady pin for brake-shoe	4	4	4
MG740/113	Adjuster cam for brake-shoe	2	2	2
MG740/114	Sleeve for ditto	2	2	2
MG740/115	Circlip for ditto	2	2	2
MG740/116	Tab washer for adjuster cam	2	2	2
X740/2	Washer for adjuster cam	2	2	2
MG740/117	Spring for adjuster cam	2	2	2
MG740/14	Spindle assembly for adjuster cam (front)	2	2	2
MG740/122	Washer for adjuster cam spindle (small) ...	4	4	4
MG740/123	" " " " " (large) ...	2	2	2
MG661/147	Anchor pin for brake-shoes	2	2	2
X661/8	Nut for ditto	2	2	2
X661/9	Washer for ditto	2	2	2
MG740/15	**Front wheel cylinder complete**	2	2	2
MG740/125	Front wheel cylinder only	2	2	2
MG740/126	Piston for ditto	4	4	4
MG661/150	Return spring for piston	2	2	2
MG740/16	Crown spring for ditto (with retainer)	4	4	4
MG740/129	Rubber cup for piston	4	4	4
MG740/130	End boot for front wheel cylinder	4	4	4
MG661/158	Bleeder screw for front wheel cylinder	2	2	2
X661/10	Set screw for ditto	2	2	2
X661/11	Spring washer for ditto	2	2	2
MG740/131	Angle hose connection for front wheel cylinder	2	2	2
MG661/157	Bolt for ditto	2	2	2
MG661/102	Washer for ditto (small)	2	2	2
MG661/112	" " " (large)	2	2	2
X661/12	Fixing screw for front wheel cylinder	2	2	2
MG740/132	" " " " " " (special)...	2	2	2
X661/13	Spring washer for ditto	4	4	4
MG740/17	Brake-shoe with lining and pin (front wheel, front O/S and rear N/S)	2	2	2
MG740/18	Ditto (front wheel, front N/S and rear O/S) ...	2	2	2
MG740/30	Lining for brake-shoe (set of 4 with rivets)... ...	As required		
X661/16	Rivet for brake-shoe lining	16	16	16
X740/4	Washer for brake-shoe steady pins (thick) ...	4	4	4
X661/14	" " " " " (thin) ...	4	4	4
X661/15	Washer for brake-shoe anchor pin	2	2	2
X661/23	Thackeray washer for brake-shoe anchor pin ...	2	2	2
MG661/189	Circlip for brake-shoe anchor pin	2	2	2
MG740/136	Pull-off spring for brake-shoes	2	2	2
MG740/19	Adjuster push rod O/S	1	1	1
MG740/20	" " " N/S	1	1	1
X740/5	Thackeray washer for ditto	2	2	2
MG740/23	**Rear brake anchor bracket assembly O/S (less shoes and operating gear)**	1	1	1
MG740/24	**Ditto N/S (less shoes and operating gear)**	1	1	1
MG661/140	Steady pin for brake-shoes	4	4	4
MG740/143	Steady pin for adjuster push rod	2	2	2
MG740/113	Adjuster cam for brake-shoes	2	2	2
MG740/114	Sleeve for ditto	2	2	2
MG740/115	Circlip for ditto	2	2	2
MG740/116	Tab washer for adjuster cam	2	2	2
X740/2	Washer for adjuster cam	2	2	2
MG740/117	Spring for adjuster cam	2	2	2
MG740/25	Spindle assembly for adjuster cam (rear)	2	2	2
MG661/147	Anchor pin for brake-shoes	2	2	2
X661/8	Nut for ditto	2	2	2
X661/9	Washer for ditto	2	2	2
MG740/31	**Rear wheel cylinder complete**	2	2	2
MG661/195	Rear wheel cylinder only	2	2	2
MG740/155	Piston for ditto	4	4	4
MG661/150	Return spring for piston	2	2	2
MG661/25	Crown spring for ditto (with retainer)	4	4	4
MG661/153	Rubber cup for piston	4	4	4
MG740/156	End boot for rear wheel cylinder (rubber) ...	4	4	4
MG661/158	Bleeder screw for rear wheel cylinder	2	2	2
X661/10	Set screw for ditto	2	2	2
X661/11	Spring washer for ditto	2	2	2
MG661/165	Inlet connection for rear wheel cylinder ...	2	2	2
MG661/157	Bolt for ditto	2	2	2

Part No.	DESCRIPTION	No. Used Saloon	Tourer	Foursome
MG661/102	Washer for ditto (small)	2	2	2
MG661/112	" " " (large)	2	2	2
X661/12	Fixing screw for rear wheel cylinder	4	4	4
X661/13	Spring washer for ditto	4	4	4
MG740/17	Brake-shoe with lining and pin (rear wheel, front O/S and rear N/S)	2	2	2
MG740/18	Ditto (rear wheel, front N/S and rear O/S) ...	2	2	2
MG740/30	Lining for brake-shoe (set of 4 with rivets)		As required	
X661/16	Rivet for brake-shoe lining	16	16	16
X740/4	Washer for brake-shoe steady pins (thick) ...	4	4	4
X661/14	" " " " " (thin) ...	4	4	4
X661/15	Washer for brake-shoe anchor pin	2	2	2
X661/23	Thackeray washer for brake-shoe anchor pin ...	2	2	2
MG661/189	Circlip for brake-shoe anchor pin	2	2	2
MG740/136	Pull-off spring for brake-shoes	2	2	2
MG740/27	Brake-shoe operating lever assembly O/S (hand brake)	1	1	1
MG740/28	" " " " N/S (hand brake)	1	1	1
MG740/149	Spring for ditto O/S	1	1	1
MG740/150	" " " N/S	1	1	1
X740/6	Slotted nut for brake-shoe operating lever pivot pin	2	2	2
X740/7	Washer for ditto	2	2	2
MG661/173	Retaining plate for brake-shoe operating lever...	2	2	2
MG661/174	Bolt for ditto	2	2	2
X661/19	Slotted nut for ditto	2	2	2
MG661/175	Bent spring washer for ditto	2	2	2
MG740/151	Adjuster push rod for rear brake-shoes O/S ...	1	1	1
MG740/152	" " " " " " " N/S ...	1	1	1
X740/5	Thackeray washer for ditto	2	2	2
X740/8	Plain washer for adjuster push rod steady pin	2	2	2
MG740/157	Bent spring washer for ditto	2	2	2
MG740/29	**Brake cable complete**	2	2	2
MG661/182	Pin for brake cable fork end	2	2	2
MG661/183	Bracket for brake cable (on brake anchor bracket)	2	2	2
MG661/184	Joint for ditto	2	2	2
MG661/185	Cap for ditto...	2	2	2
X661/21	Bolt for cable bracket	4	4	4
X661/22	Nut for ditto	4	4	4
X661/11	Spring washer for ditto	4	4	4
S116/1	Brake cable stop bracket (on frame brace) ...	2	2	2
S72/2	Adjuster spring for brake cables	2	2	2
S105/7	Adjuster nut for brake cables	2	2	2
S2/62	Clip (brake cables to footwell)	2	2	2

ALTERATIONS

.....

.....

.....

.....

.....

.....

.....

.....

.....

.....

.....

.....

CONTROLS (illustration on page 34)

MG741	**Accelerator pedal assembly**	1	1	1
S27/54	Rubber ferrule for ditto	1	1	1
S122/2	Roller for accelerator pedal	1	1	1
S94/6	Felt washer for ditto	1	1	1
S47/10	Sleeve for ditto	1	1	1
S73/3	Accelerator return spring	1	1	1
S44/111	Stop bracket for accelerator pedal	1	1	1
S73/10	Steady spring for accelerator pedal	1	1	1
S64/15	Accelerator control rod with ball joints ...	1	1	1
S47/8	Pin for carburetter levers	2	2	2
A1002	Slow-running control wire complete	1	1	1
A1003	Mixture control wire complete	1	1	1
A1004	Starter pull wire complete	1	1	1
S2/51	Clip (control wires to dash)	3	3	3

Part No.	DESCRIPTION	No. Used Saloon	Tourer	Foursome
S73/9	Return spring for slow-running control Comm. Ch. No. VA1078	1	1	1
S2/51	Clip (mixture control wire to stop bracket) Comm. Ch. No. VA1048	1	1	1

ALTERATIONS

.....

.....

.....

.....

.....

.....

STEERING GEAR (illustration on page 34)

MG849	**Steering gear unit complete (less wheel)**	1	1	1
MG742/1	Steering box (bushed) with outer tube Ceased Ch. No. VA2205	1	1	1
MG849/1	„ „ (bushed) with outer tube Comm. Ch. No. VA2206	1	1	1
MG742/2	„ „ (bushed)	1	1	1
MG742/101	Bush for steering box	1	1	1
MG742/102	Outer tube Ceased Ch. No. VA2205	1	1	1
MG849/100	„ „ Comm. Ch. No. VA2206	1	1	1
MG742/3	Inner column with cam Ceased Ch. No. VA2205 ...	1	1	1
MG849/2	„ „ „ „ Comm. Ch. No. VA2206 ...	1	1	1
MG742/104	Steering cam	1	1	1
MG628/110	Ball cup for cam	2	2	2
MG628/111	Ball cage with balls	2	2	2
MG708/101	Bottom end cover for steering box	1	1	1
MG667/108	Plate for ditto	1	1	1
MG667/114	Shim for bottom end cover (.002″)		As required	
MG667/115	„ „ „ „ „ (.005″)		As required	
MG667/116	„ „ „ „ „ (.010″)		As required	
MG667/117	Joint for bottom end cover	1	1	1
MG742/105	Cork washer for stator tube	1	1	1
MG742/106	Junction box bracket	1	1	1
MG628/120	Oil filler plug for steering box	1	1	1
MG628/121	Washer for ditto	1	1	1
MG429/126	Felt bush for top of column	1	1	1
MG569/104	Retaining ring for ditto	1	1	1
MG708/104	Circlip for steering wheel	1	1	1
MG742/4	Rocker-shaft with peg	1	1	1
MG742/108	Peg for rocker-shaft	1	1	1
MG742/109	Cork gland for rocker-shaft	1	1	1
MG742/110	Retaining ring for ditto	1	1	1
MG742/111	Side cover for steering box	1	1	1
MG742/112	Shim for ditto (.002″)		As required	
MG742/113	„ „ „ (.005″)		As required	
MG742/114	„ „ „ (.010″)		As required	
MG742/115	Joint for side cover...	1	1	1
MG742/116	Steering drop arm	1	1	1
MG743	**Steering box bracket with cap**	1	1	1
S44/107	Support bracket for steering column	1	1	—
S44/117	Steady for ditto	1	1	—
1919	Clamp for steering column	1	1	1
S27/55	Rubber ferrule for steering column	1	1	1
A1005	**Steering wheel complete**	1	1	1
A926/100	Spring for ditto (telescopic)	1	1	1
A926/101	Retaining washer for ditto (top)	1	1	1
A926/102	„ „ „ „ (bottom)	1	1	1
MG744	**Draglink assembly**	1	1	1
MG744/100	Draglink tube	1	1	1
MG744/101	Ball seat (inner) (steering arm eud)	1	1	1
MG744/102	Steering ball (steering arm end)	1	1	1
MG744/103	Ball seat (outer) (steering arm end)	1	1	1
MG744/104	End plug for draglink (steering arm end) ...	1	1	1
MG744/106	Spring seat (inner) (drop arm end)	1	1	1
MG744/105	Ball seat (inner) (drop arm end)...	1	1	1
MG744/107	Steering ball (drop arm end)	1	1	1
MG744/108	End plug for draglink (drop arm end)	1	1	1
MG668/104	Spring for draglink end	2	2	2
S107/8	Leather gaiter for draglink	1	1	1
S52/7	Clip for ditto	2	2	2

Part No.	DESCRIPTION		No. Used Saloon	Tourer	Foursome
S1/14	Greaser for draglink...	Ceased Ch. No. VA1794	2	2	2
S1/23	Ditto (track rod end) ...	Comm. Ch. No. VA1795	1	1	1
S1/21	Ditto (drop arm end) ...		1	1	1

ALTERATIONS

.....

.....

.....

.....

.....

.....

.....

.....

.....

.....

.....

RADIATOR AND CONNECTIONS (illustration on page 39)

MG716	**Radiator complete...**	1	1	1
MG716/1	Radiator case with grille and false nose	1	1	1
MG497/102	M.G. medallion for radiator	1	1	1
MG716/101	Radiator grille	1	1	1
S23/3	Bonnet rest rubber	1 lgth.	1 lgth.	1 lgth.
MG444/106	Bracket for bonnet hinge rod	1	1	1
MG716/2	Radiator film block (complete with tanks)	1	1	1
A153/100	Radiator thermo union	1	1	1
P214/102	Radiator drain tap	1	1	1
P214/103	Fibre washer for thermo union and drain tap...	2	2	2
MG683/107	Bracket for radiator stay rod	2	2	2
MG683/108	Headlamp bracket lug	2	2	2
2626	Rubber ferrule for ditto	2	2	2
MG716/105	Tie bar for ditto	1	1	1
P214/100	Radiator filler cap	1	1	1
P214/101	Rubber ring for ditto	1	1	1
S75/16	Washer for radiator mounting	4	4	4
S66/12	Radiator stay rod O/S	1	1	1
S66/11	" " " N/S	1	1	1
S48/5	Yoke end for ditto	4	4	4
S61/4	Eye bolt for ditto	2	2	2
S28/14	Water hose connection (top)	1	1	1
A915	Clip for ditto	2	2	2
S28/13	Water hose connection (bottom)	1	1	1
A914	Clip for ditto	2	2	2

ALTERATIONS

.....

.....

.....

.....

.....

.....

EXHAUST PIPES AND SILENCERS

MG745/1	Front exhaust pipe complete	1	1	1
S15/5	Gasket for ditto	1	1	1
S98/12	Sealing washer for ditto (steel)	1	1	1
S44/110	Support for front exhaust pipe	1	1	1
S54/6	Distance piece for ditto	1	1	1
S49/24	Clip for front exhaust pipe	1	1	1
MG745/2	Rear exhaust pipe (complete with silencers)... ...	1	1	1
MG745/106	Clip for ditto (on pipe)	1	1	1
S15/4	Washer for silencer (copper and asbestos) ...	1	1	1
S49/17	Support for front silencer	1	1	1
S27/37	Rubber ferrule for silencer support	3	3	3
S108/3	Cup for ditto	3	3	3
S59/6	End piece for exhaust tail pipe	1	1	1
S66/13	Support rod for exhaust tail pipe	1	1	1
S49/18	Clip for exhaust tail pipe	1	1	1

ALTERATIONS

.....

.....

.....

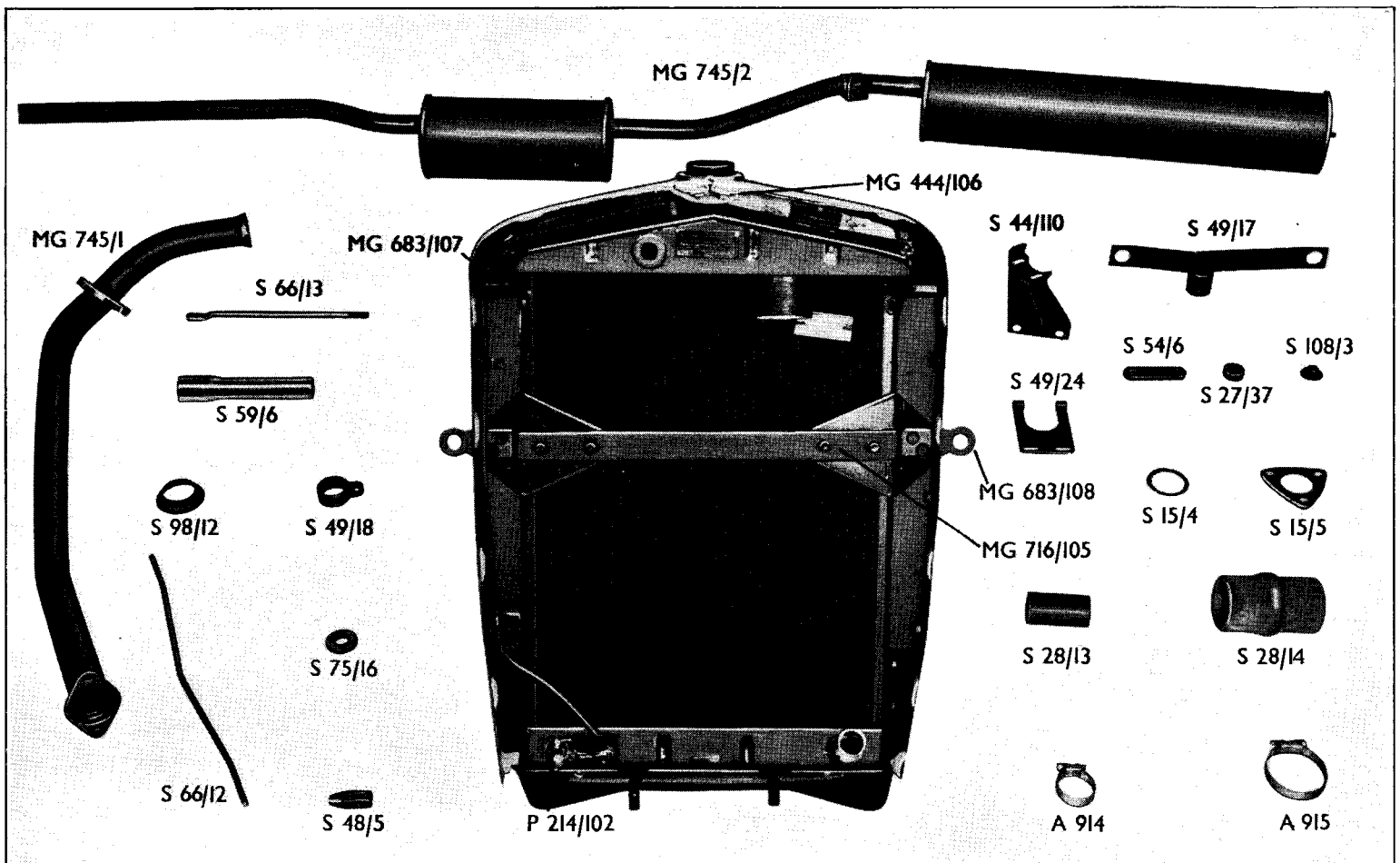
MG 745/2
MG 444/106
MG 745/1
MG 683/107
S 44/110
S 49/17
S 66/13
S 54/6
S 108/3
S 27/37
S 49/24
S 59/6
MG 683/108
S 15/4
S 15/5
S 98/12
S 49/18
MG 716/105
S 28/13
S 28/14
S 75/16
S 66/12
S 48/5
P 214/102
A 914
A 915

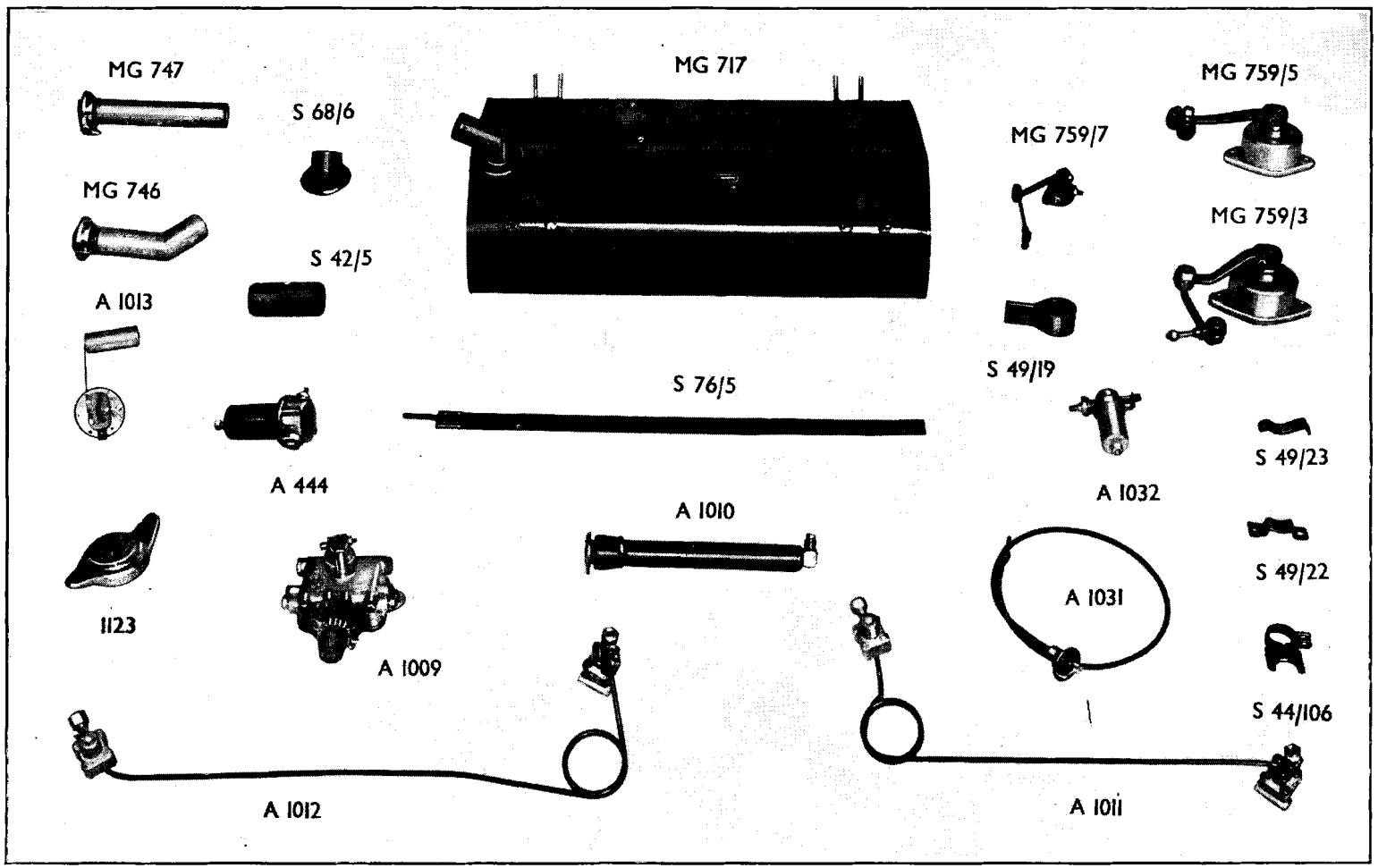
MG 747
S 68/6
MG 717
MG 759/5
MG 759/7
MG 746
MG 759/3
S 42/5
A 1013
S 49/19
S 76/5
A 444
A 1032
S 49/23
A 1010
S 49/22
1123
A 1031
A 1009
S 44/106
A 1012
A 1011

Part No.	DESCRIPTION	No. Used Saloon	Tourer	Foursome

.....
.....
.....

PETROL TANK AND PIPES (illustration on page 40)

MG717	**Petrol tank complete**	1	1	1
MG717/1	Drain plug and strainer for petrol tank ...	1	1	1
S15/3	Washer for ditto	1	1	1
S76/5	Petrol tank strap	2	2	2
S49/19	Clip for ditto (front end)	2	2	2
S21/30	Packing for tank straps	2	2	2
S75/32	Rubber washer for tank straps	2	2	2
MG747	Filler neck for petrol tank with cap	1	—	—
MG746	" " " " " " "	—	1	—
B275/3	" " " " " " "	—	—	1
A1069	Filler cap for petrol tank	1	1	1
S68/6	Rubber ferrule for filler neck	1	1	1
S42/5	Hose connection for filler neck	1	1	1
A667	Clip for ditto	2	2	2
S67/11	Petrol pipe (tank to connector) (82″ long) Ceased Ch. No. VA0635	1	1	1
S67/15	Ditto (tank to connector) (96″ long) Comm. Ch. No. VA0636	1	1	1
S3/33	Connector for petrol pipe	1	1	1
S67/12	Petrol pipe (connector to pump) (83″ long) Ceased Ch. No. VA0635	1	1	1
S67/16	Ditto (connector to pump) (69″ long) Comm. Ch. No. VA0636	1	1	1
A444	**Petrol pump complete**	1	1	1
S67/13	Petrol pipe (pump to flexible pipe) (18″ long)...	1	1	1
S3/33	Union for ditto	1	1	1
S3/34	Nut for petrol pipes	5	5	5
S3/35	Olive for ditto	5	5	5
S99/25	Flexible petrol pipe (union to rear carburetter)	1	1	1
S99/26	" " " (between carburetters) ...	1	1	1
A562/106	Banjo union for ditto	1	1	1
S2/41	Clip (pipe to N/S tank strap)	1	1	1
S2/58	Clip (pipe to frame and dash)	3	3	3
A1013	Tank attachment for petrol gauge	1	1	1
S32/9	Screw for ditto	6	6	6

ALTERATIONS

.....
.....
.....
.....
.....
.....

WHEELS AND HUB NUTS

A1065	Wheels	5	5	5
1123	Hub lock nut O/S	2	2	2
1756	" " " N/S	2	2	2

ALTERATIONS

.....
.....
.....
.....
.....
.....

NUMBER-PLATES

S112/2	Front number-plate	1	1	1
S56/34	Support for ditto	1	1	1
S112/1	Rear number-plate Ceased Body No. **652**/10154	—	1	—
S112/10	" " " Comm. Body No. **653**/10156	—	1	—
S44/108	Bracket for ditto O/S	—	1	—
S44/109	" " " N/S	—	1	—
A1041	Illuminated rear number-plate complete	1	—	1
A980/1	Front cover assembly (less glasses)	1	—	1
A980/104	Rubber beading for ditto	1	—	1
A973/101	Number-plate glass	1	—	1
A980/103	Glass for stop and tail-lamp	1	—	1

Part No.	DESCRIPTION	No. Used Saloon	Tourer	Foursome
A980/100	Glass for reversing lamp	1	—	1
S20/8	Bulb for stop and tail-lamp and number-plate	3	—	3
S20/10	Bulb for reversing lamp	1	—	1

ALTERATIONS

.....

.....

.....

.....

.....

.....

GROUPED NIPPLE LUBRICATING SYSTEM

MG750/100	Pipe (2′ 3″ long) (grouped nipples to front spring rear pin)	2	2	2
MG750/101	„ (7′ 2″ long) (grouped nipples to brake cables)	2	2	2
MG750/102	„ (9′ 11″ long) (grouped nipples to rear pipe connectors)	2	2	2
MG750/103	„ (3′ 7″ long) (coiled R.H.)	1	1	1
MG750/104	„ (3′ 7″ long) (coiled L.H.)	1	1	1
MG669/106	„ (6″ long) (between rear spring rear shackle)	2	2	2
MG669/1	Pipe connectors complete	2	2	2
MG669/2	Elbow feed connectors complete (front spring rear pins, rear spring shackles)	4	4	4
MG669/3	Tee feed connectors complete (rear spring shackles)	2	2	2
MG669/4	Straight feed connectors complete (brake cables)	2	2	2
MG669/116	Sleeve for connectors	20	20	20
MG669/117	Nut for connectors	20	20	20
MG669/115	Battery plate fitting (on engine shield) Ceased Ch. No. VA1794	6	6	6
MG833/100	Ditto (on engine shield) Comm Ch. No. VA1795	6	6	6
MG669/112	Clip for one pipe ($\frac{1}{4}$″ fixing hole)	2	2	2
P113/109	„ „ „ „ ($\frac{3}{16}$″ fixing hole)	4	4	4
P278/111	Clip for two pipes ($\frac{3}{16}$″ fixing hole)	8	8	8
MG750/105	„ „ „ „ ($\frac{5}{16}$″ fixing hole)	2	2	2
MG669/114	Clip for three pipes	2	2	2
S63/3	Identification plate for grouped nipples O/S ...	1	1	1
S63/4	„ „ „ „ „ N/S ...	1	1	1
S44/95	Bracket for ditto	2	2	2

ALTERATIONS

.....

.....

.....

.....

.....

.....

SHOCK ABSORBERS AND CONTROL SYSTEM (illustration on page 40)

MG759/3	**Front shock absorber complete O/S** ...	1	1	1
MG759/4	„ „ „ „ **N/S** ...	1	1	1
A1060	Front shock absorber (less arm and link)	2	2	2
MG759/9	Front shock absorber arm with connecting link and mounting pin O/S ...	1	1	1
MG759/10	Ditto N/S	1	1	1
MG759/130	Cotter pin for ditto	2	2	2
MG759/5	**Rear shock absorber complete O/S** ...	1	1	1
MG759/6	**„ „ „ „ N/S** ...	1	1	1
A1060	Rear shock absorber (less arm and link)	2	2	2
MG759/11	Rear shock absorber arm with connecting link and mounting pin O/S ... (Ceased Ch. No. VA1914)	1	1	1
MG759/12	Ditto N/S	1	1	1
MG759/130	Cotter pin for ditto	2	2	2
A1032	**Spill tank for shock absorber control** (on engine shield)	1	1	1
S49/22	Seat for ditto	1	1	1
S49/23	Clip for ditto	2	2	2
A1031	Control unit for shock absorbers (on steering column) (with flexible connection)	1	1	1
A1031/1	Flexible connection for ditto ...	1	1	1
S27/45	Rubber ferrule for ditto	1	1	1
S44/106	Bracket for control unit	1	1	1
MG759/7	**Pump for shock absorber control complete**	1	1	1

Part No.	DESCRIPTION		No. Used Saloon	Tourer	Foursome
A1061	Pump for shock absorber control (less arm and link)	Ceased Ch. No. VA1914	1	1	1
MG759/13	Arm for pump with connecting link and pin		1	1	1
S44/105	Bracket for pump		1	1	1
MG759/100	Pipe (42″ long) (spill tank to 4-way junction (front))		1	1	1
MG759/101	„ (22″ long) (4-way junction to 3-way junction)		1	1	1
MG759/102	„ (53″ long) (3-way junction to O/S front shock absorber) ...		1	1	1
MG759/103	„ (25″ long) (3-way junction to N/S front shock absorber)		1	1	1
MG759/104	„ (132″ long) (spill tank to pump)		1	1	1
MG759/105	„ (9″ long) (pump to 4-way junction (rear))		1	1	1
MG759/106	„ (94″ long) (4-way junction (rear) to 4-way junction (front)) ...		1	1	1
MG759/107	„ (7″ long) (4-way junction (rear) to O/S rear shock absorber)		1	1	1
MG759/108	„ (18″ long) (4-way junction (rear) to N/S rear shock absorber)		1	1	1
MG759/109	Sleeve (for $\frac{1}{4}$″ dia. pipe)		2	2	2
MG759/110	„ (for $\frac{5}{32}$″ dia. pipe)		16	16	16
MG759/111	Threaded bushing (for $\frac{1}{4}$″ dia. pipe)		1	1	1
MG759/112	„ „ (for $\frac{5}{32}$″ dia. pipe)		10	10	10
MG759/113	Nut (for $\frac{1}{4}$″ dia. pipe)		1	1	1
MG759/114	„ (for $\frac{5}{32}$″ dia. pipe)		6	6	6
MG759/115	3-way union		1	1	1
MG759/116	4-way union		2	2	2
MG759/117	Plug for front 4-way junction ...		1	1	1
S2/42	Clip (pipe to engine shield) ...		1	1	1
S2/72	Binding clip (pipe to front cross tube)		4	4	4
MG850/1	**Front shock absorber complete O/S** ...	Comm. Ch. No. VA1915	1	1	1
MG850/2	„ „ „ „ **N/S** ...		1	1	1
MG851/1	**Rear shock absorber complete O/S** ...		1	1	1
MG851/2	„ „ „ „ **N/S** ...		1	1	1

ALTERATIONS

.....

.....

.....

.....

.....

.....

.....

.....

.....

.....

.....

.....

HYDRAULIC JACKING SYSTEM (illustration on page 40)

MG751/1	**Supply tank complete**	1	1	1
MG751/101	Outlet adaptor for ditto	1	1	1
MG680/102	Lock nut for ditto	1	1	1
MG680/103	Washer for ditto	2	2	2
A838/100	Tube nut for supply tank	1	1	1
A838/102	Nipple for ditto	1	1	1
MG751/103	Seat for supply tank	1	1	1
MG751/102	Clamp for supply tank	1	1	1
MG680/104	Cap for supply tank	1	1	1
MG680/105	Washer for ditto	1	1	1
A1009	**Distributor box complete**	1	1	1
MG751/111	Operating handle for ditto	1	1	1
MG680/109	Rubber grip for ditto	1	1	1
A1010	**Jack complete**	4	4	4
S51/4	Bracket for front jack	2	2	2
S49/21	Cap for ditto...	2	2	2
S49/10	Cap for rear jack bracket	2	2	2
A1011	Steel pipe with junction boxes (front)	1	1	1
A1012	„ „ „ „ „ (rear)...	1	1	1
MG751/104	Pipe (43″ long) (supply tank to distributor box)	1	1	1
MG751/105	„ (33″ long) (distributor box to front junction box)	1	1	1

Part No.	DESCRIPTION	No. Used Saloon	Tourer	Foursome
MG751/106	Pipe (58″ long) (distributor box to rear junction box)	1	1	1
MG751/107	„ (53″ long) (junction box to front O/S jack)	1	1	1
MG751/108	„ (9″ long) (junction box to front N/S jack) ...	1	1	1
MG751/109	„ (21½″ long) (junction box to rear O/S jack)	1	1	1
MG751/110	„ (10½″ long) (junction box to rear N/S jack)	1	1	1
S2/41	Clip (pipe to front shock absorber pins) ...	2	2	2
S2/43	„ (for supply pipe)	4	4	4

ALTERATIONS

.....

.....

.....

.....

.....

.....

ENGINE SHIELD AND FUME EXCLUDERS

S103/10	Engine shield	1	1	1
S44/92	Bracket (engine shield and dash to frame) O/S ...	1	1	1
S44/93	„ (engine shield and dash to frame) N/S ...	1	1	1
S21/31	Felt packing for ditto	2	2	2
S41/7	Rubber surround for engine shield (76″ long) ...	1 lgth.	1 lgth.	1 lgth.
S44/94	Plate for steering column cut-out (in engine shield)	1	1	1
S66/14	Stay rod (engine shield to dash)	2	2	2
S48/5	Yoke end for ditto	4	4	4
S61/4	Eye bolt for ditto	4	4	4
S103/11	Flywheel housing shroud	1	1	1
S41/6	Rubber surround for ditto...	1	1	1

ALTERATIONS

.....

.....

.....

.....

.....

.....

FACIA BOARD EQUIPMENT AND INSTRUMENTS (illustration on page 47)

A1019	**Instrument panel with switches...**	1	1	1
S44/97	Support stay for instrument panel	1	1	1
S87/3	Cork packing for instrument panel O/S ...	1	1	1
S87/4	„ „ „ „ „ N/S ...	1	1	1
A878	**Ignition warning light complete**	1	1	1
A878/100	Rim and glass for ditto	1	1	1
S20/19	Bulb for ditto	1	1	1
S20/18	Bulb for panel illumination	4	4	4
A1019/1	**30 m.p.h. warning light complete**	1	1	1
A1019/2	Rim and glass for ditto	1	1	1
S20/19	Bulb for ditto	1	1	1
A823	**Switch and rheostat for panel illumination complete** ...	1	1	1
A823/100	Knob for ditto	1	1	1
A824	**Switch for oil level gauge**	1	1	1
A825	**Dynamo and lamp switch**	1	1	1
A894	**Ignition switch with key** } Quote Type Letters and	1	1	1
A894/100	Key for ditto } Numbers when ordering	1	1	1
A1019/3	Switch for reversing lamp	1	1	1
A815	**Speedometer**	1	1	1
A817	**Revolution counter and clock**	1	1	1
A815/100	Rim for speedometer and revolution counter ...	2	2	2
A815/102	Glass for speedometer and revolution counter ...	2	2	2
A815/103	Rubber packing for ditto	2	2	2
A815/104	Clamp for speed and revolution counter ...	2	2	2
A815/105	Nut for clamp	4	4	4
A816	**Speedometer cable complete**	1	1	1
A816/1	Outer casing for ditto	1	1	1
A816/100	Inner cable for ditto	1	1	1
A1014	**Revolution counter cable complete**	1	1	1
A1014/100	Outer casing for ditto	1	1	1
A1014/101	Inner cable for ditto	1	1	1
S27/41	Rubber ferrule for revolution counter cable ...	2	2	2
A819	Reduction box for revolution counter (on dynamo)	1	1	1
A821/3	Radiator thermometer with pipe line	1	1	1
A821/2	Ammeter	1	1	1

Part No.	DESCRIPTION	No. Used Saloon	Tourer	Foursome
A822/1	Oil pressure gauge	1	1	1
A1015/1	Oil and petrol level gauge	1	1	1
A821/4	Case for instrument with glass	2	2	2
A821/100	Rim for ditto	2	2	2
A822/100	Glass for ditto	2	2	2
A821/102	Rubber packing for ditto	2	2	2
A821/103	Clamp for instrument	2	2	2
A821/104	Nut for ditto	4	4	4
S67/14	Pipe line for oil pressure gauge ... Ceased Ch. No. VA1391	1	1	1
S67/20	Ditto (copper) ...	1	1	1
S99/28	Ditto (flexible) ... Comm. Ch. No. VA1392	1	1	1
S3/38	Connector for ditto...	1	1	1
S27/43	Rubber ferrule for radiator thermometer pipe ...	2	2	2
S2/12	Binding clip for radiator thermometer pipe ...	4	4	4

ALTERATIONS

.....

.....

.....

.....

.....

.....

.....

.....

.....

.....

.....

.....

LAMPS (illustration on page 47)

A1029/1	**Headlamp complete O/S**	1	1	1
A1029/2	„ „ **N/S**	1	1	1
A1029/3	Headlamp reflector O/S complete	1	1	1
A1029/4	„ „ N/S complete	1	1	1
A1029/5	Extension rim complete N/S	1	1	1
A1029/6	Dipper unit complete N/S...	1	1	1
A1029/100	Headlamp rim	2	2	2
A492/100	Headlamp glass	2	2	2
A471/101	Locking screw for headlamp rim	2	2	2
A869/2	Bulb holder complete	2	2	2
S20/22	Bulb for headlamp	2	2	2
A1026	**Headlamp dipper switch**	1	1	1
S44/102	Bracket for ditto ... Ceased Ch. No. VA0793	1	1	1
A1108	**Sidelamp complete**	2	2	2
A1108/1	Rim and glass for sidelamp	2	2	2
A252/101	Bulb holder for sidelamp	2	2	2
S20/8	Bulb for sidelamp	2	2	2
2563	Rubber packing for sidelamp	2	2	2
A717	**Stop and tail-lamp complete**	—	1	—
A406/2	Rim for stop and tail-lamp (less glass)	—	1	—
A717/100	Glass for stop and tail-lamp	—	1	—
A717/102	Screw for rim	—	1	—
A2/55	Clip (tail-lamp wire to number-plate brackets)...	—	2	—
A406	**Reversing lamp complete**	—	1	—
A406/1	Fixing plate for bulb contact assembly ...	—	1	—
A406/2	Rim for reversing lamp (less glass)	—	1	—
A406/100	Glass for reversing lamp	—	1	—
A717/102	Screw for rim	—	1	—
A406/101	Rubber bead for glass	—	1	—
A873	**Stop lamp switch with spring**	1	1	1
A873/100	Spring for ditto	1	1	1
S114/1	Connecting link for ditto	1	1	1
S44/98	Bracket for stop lamp switch	1	1	1

ALTERATIONS

.....

.....

.....

.....

.....

.....

.....

.....

.....

Part No.	DESCRIPTION		No. Used Saloon	Tourer	Foursome
	WINDSCREEN WIPER (illustration on page 47)				
A968/1	**Windscreen wiper motor unit**		1	—	1
A968/100	Securing bracket for ditto ...		1	—	1
A968/101	Rubber for ditto		1	—	1
A968/102	Rubber block for wiper mounting		1	—	1
S55/21	Distance tube for wiper motor mounting		2	—	2
S54/8	Packing washer for wiper motor mounting		4	—	4
A1037	**Driving cable for windscreen wiper** ...		1	—	1
S27/41	Rubber bush for wiper drive (in dash)	Ceased	1	—	1
A990	**Windscreen wiper blade actuating assembly**	Body No.	1	—	1
A990/1	Knob for ditto (driver's side) with set screw	847/**6100**	1	—	1
A990/2	Ditto (passenger's side) with set screw		1	—	1
A990/100	Securing bracket for angle drive box		1	—	1
A1038	Windscreen wiper arm and squeegee assembly		2	—	2
A1038/1	Arm assembly for ditto		2	—	2
A388/101	Squeegee for ditto		2	—	2
A970/100	Rubber bush (squeegee to arm) ...		2	—	2
A876/100	„ „ (for spindle) ...		2	—	2
A1127/1	**Windscreen wiper motor unit**		1	—	1
A1127/103	Rubber mounting block for ditto		1	—	1
S44/136	Bracket for windscreen wiper motor		1	—	1
A1129/1	Windscreen wiper drive assembly (motor to link)		1	—	1
A1129/100	Operating link for windscreen wiper (long)		1	—	1
A1129/101	Ditto (short)		1	—	1
A1127/101	Felt washer for ditto	Comm.	11	—	11
A1127/100	Steel washer for ditto (thin) ...	Body No.	11	—	11
A1127/106	„ „ „ „ (thick) ...	850/**8646**	3	—	3
A1127/102	Spring washer for ditto		5	—	5
A1129/2	Windscreen wiper spindle assembly (driver's side)		1	—	1
A1129/3	Ditto (passenger's side)		1	—	1
A1127/5	Knob for spindle with set screw (driver's side)		1	—	1
A1127/6	Ditto (passenger's side)		1	—	1
A1038	Windscreen wiper arm with squeegee		2	—	2
A1127/7	Arm assembly for ditto		2	—	2
A1128/8	Squeegee for ditto		2	—	2
A1127/107	Rubber bush (for spindle)... ...		2	—	2
A970/100	„ „ (squeegee to arm) ...		2	—	2
A382	**Windscreen wiper motor unit**		—	1	—
A875/2	Brush gear for ditto (with brushes)		—	1	—
A1053/1	Windscreen wiper arm assembly R.H.		—	1	—
A1053/2	„ „ „ „ L.H.		—	1	—
A388/101	Squeegee for ditto		—	2	—
A1053/100	Connecting link for wiper arms		—	1	—
S27/50	Rubber bush for wiper cable (in body) ...		—	1	—

ALTERATIONS

.....

.....

.....

.....

.....

.....

.....

.....

.....

.....

.....

.....

DRIVING MIRROR

A1030	**Driving mirror with bracket**	1	—	—
A882/100	Glass for mirror	1	—	—

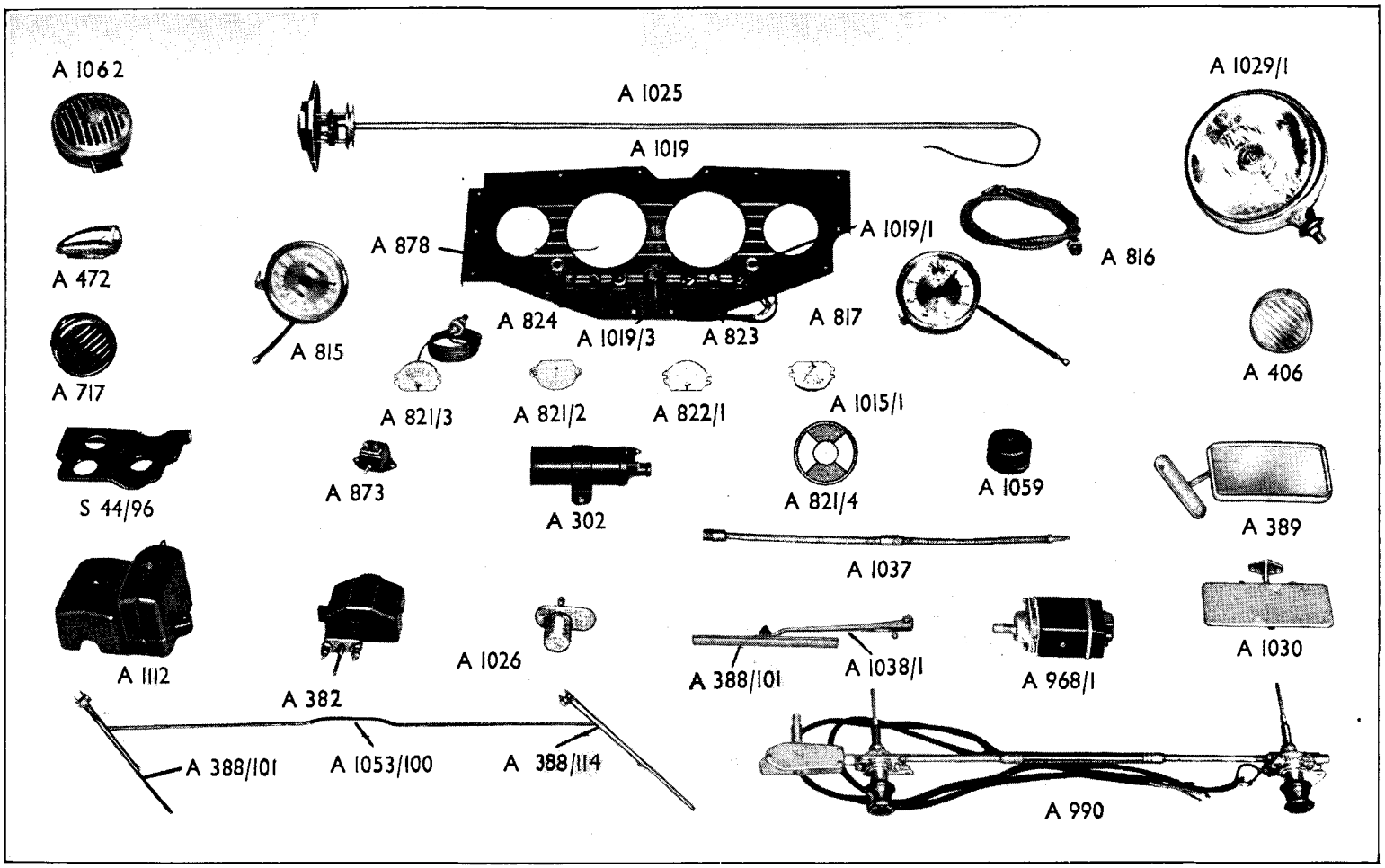
A 1062
A 1025
A 1029/1
A 1019
A 878
A 1019/1
A 816
A 472
A 815
A 824
A 1019/3
A 823
A 817
A 406
A 717
A 821/3
A 821/2
A 822/1
A 1015/1
S 44/96
A 873
A 302
A 821/4
A 1059
A 389
A 1037
A 1112
A 382
A 1026
A 388/101
A 1038/1
A 968/1
A 1030
A 388/101
A 1053/100
A 388/114
A 990

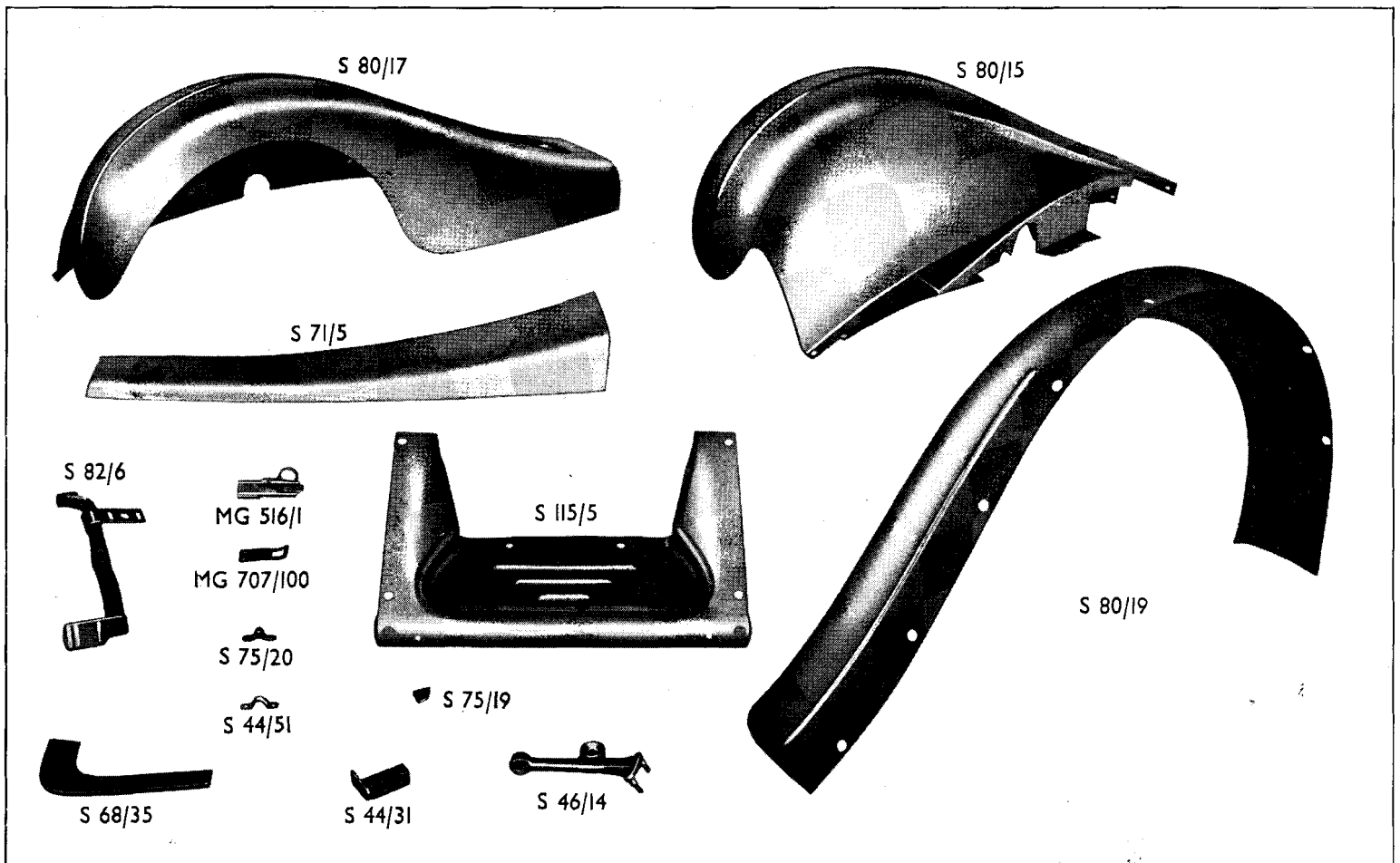
S 80/17
S 80/15
S 71/5
S 82/6
MG 516/1
MG 707/100
S 115/5
S 80/19
S 75/20
S 75/19
S 44/51
S 68/35
S 44/31
S 46/14

Part No.	DESCRIPTION	No. Used Saloon	Tourer	Foursome
A1030/100	Bracket for mirror	1	—	—
A1030/101	Fixing clip for glass	1	—	—
A389	**Driving mirror with bracket**	—	1	1
A389/101	Driving mirror (less bracket)	—	1	1
A389/100	Bracket for driving mirror	—	1	1

ALTERATIONS

.....

.....

.....

.....

.....

.....

HORN

A1036	**Horn with bracket** (on engine shield) Ceased Ch. No. VA0747	1	1	1
A1036/100	Bracket for horn to engine shield	1	1	1
A1062	**Horn with bracket** (on badge bar)	1	1	1
A1062/100	Bracket for horn to badge bar Comm. Ch. No. VA0748	1	1	1
S33/75	Bolt for ditto	1	1	1
S38/14	Nut for ditto	1	1	1

ALTERATIONS

.....

.....

.....

.....

.....

.....

REGULATOR AND JUNCTION BOX

A1112	**Regulator box complete** (on engine shield)	Ceased Ch. No. VA1468	1	1	1
A1028/100	Regulator		1	1	1
A881/100	Regulator cover		1	1	1
A881/1	Resistance assembly (field) (63 ohms)		1	1	1
A881/2	Ditto (swamping) (38 ohms) ...		1	1	1
A1112/100	Regulator	Comm. Ch. No. VA1469	1	1	1
A1111/101	Regulator cover		1	1	1
A1111/1	Resistance assembly		1	1	1
A139/101	Fuse (25 amp)		5	5	5
A955/1	Fuse cover		1	1	1
S44/96	Bracket for regulator box		1	1	1
A1059	**Junction box** (on steering box)...		1	1	1
A1059/1	Cap for ditto (with screw)		1	1	1

ALTERATIONS

.....

.....

.....

.....

.....

.....

BATTERY

A1020	**Battery**	1	1	1
A1020/100	Battery rod	2	2	2
S113/4	Base board for battery	1	1	1

ALTERATIONS

.....

.....

.....

.....

.....

.....

IGNITION COIL

A302	**Ignition coil**	1	1	1

Part No.	DESCRIPTION	No. Used Saloon	Tourer	Foursome

ALTERATIONS

.....

.....

.....

.....

.....

.....

HARNESSED CABLES AND CLIPS

A1021/1	**Harnessed cables complete (main)** } Ceased Ch.	1	1	1
A1021/2	**Starter cables complete** ... ... } No. VA1370	1	1	1
A1110/1	**Harnessed cables complete (main)** } Comm. Ch.	1	1	1
S2/43	Clip (for cables to bell housing) } No. VA1371	1	1	1
S2/66	„ (cables to dash and engine shield)... ...	4	4	4
S2/69	„ (cables to frame) O/S	3	3	3
S2/62	„ (cables to frame) O/S (clip-on type) ...	3	3	3
S2/49	„ (cables to steering box)	1	1	1
S2/48	„ (cables to rear cross member)	2	2	2
S2/50	„ (for negative starter lead and cables to wing stays)	5	5	5
S27/44	Ferrule (cables through engine shield)	2	2	2
S27/41	„ (cables through dash)	1	1	1
S27/18	„ (for negative starter cable clips) ...	3	3	3
S27/56	„ (for negative starter cable) (through frame brace)	2	2	2
S27/38	Ferrule (for cables through rear cross member)	1	1	1
S2/50	Clip (petrol gauge cable to tank)	1	1	1

ALTERATIONS

.....

.....

.....

.....

.....

.....

TRAFFICATOR AND HORN CONTROLS (illustration on page 47)

A1024	**Steering column control complete**	1	—	1
A1025	„ „ „ „	—	1	—
A1024/100	Top cover for ditto	1	1	1
A1024/101	Knob for horn push	1	1	1
A1024/102	Spring for ditto	1	1	1
A1024/1	Horn push base assembly	1	1	1
A1024/2	Trafficator switch complete	1	—	1
A1024/3	Trafficator switch base assembly	1	—	1
A1024/4	Trafficator switch contact assembly	1	—	1
A1024/5	Lever assembly for Trafficator switch	1	—	1
A1024/103	Trafficator control return ring	1	—	1
A1024/6	Stator sleeve and plate assembly	1	1	1
A1024/104	Stator tube	1	1	1
S31/7	Grub screw for control (in steering wheel) ...	2	2	2

ALTERATIONS

.....

.....

.....

.....

.....

.....

WINGS AND STAYS (illustration on page 48)

S80/15	Front wing O/S (primed)	1	1	1
S80/17	„ „ N/S (primed)	1	—	1
S80/16	„ „ N/S (primed)	—	1	—
S82/6	Front wing stay O/S	1	1	1
S82/7	„ „ „ N/S	1	1	1
S55/12	Mounting tube for ditto	2	2	2
S27/35	Bush for ditto (rubber)	4	4	4
S44/31	End piece for front wing rear stay	1	2	2
S46/14	Headlamp bracket O/S	1	1	1
S46/15	„ „ N/S	1	1	1
2585	Rubber packing (front wing to stay)	2	2	2
2586	„ „ (front wing to headlamp bracket)	2	2	2
S33/73	Bolt for headlamp brackets	2	2	2

Part No.	DESCRIPTION	No. Used Saloon	Tourer	Foursome
S89/27	Fixing stud for front wing (rear N/S)	1	1	1
S80/18	Rear wing O/S (primed)	1	—	—
S80/19	„ „ N/S (primed)	1	—	—
S80/20	„ „ O/S (primed)	—	1	—
S80/21	„ „ N/S (primed)	—	1	—
S80/31	„ „ O/S (primed)	—	—	1
S80/32	„ „ N/S (primed)	—	—	1

ALTERATIONS

.....

.....

.....

.....

.....

.....

RUNNING-BOARDS (illustration on page 48)

S71/5	Running-board O/S (primed)	1	1	1
S71/6	„ N/S (primed)	1	1	1
S37/17	Step channelling (22 11/16″ long) Ceased Ch. No. VA0780	2	2	—
S37/18	„ „ (47 27/32″ long)	2	2	—
S37/19	„ „ (47 3/32″ long)	2	2	—
S37/20	„ „ (48 19/32″ long)	2	2	—
S68/35	Joint between running-board and front wing ...	2	2	2

ALTERATIONS

.....

.....

.....

.....

.....

.....

BONNET AND FASTENERS

MG752	**Bonnet complete** (primed)	1	—	1
MG752/100	Bonnet top O/S (primed)	1	—	1
MG752/101	„ „ N/S (primed)	1	—	1
MG752/102	Bonnet top hinge rod	1	—	1
MG752/106	Cover for ditto	1	—	1
MG752/103	Bonnet side O/S (primed)...	1	—	1
MG752/104	„ „ N/S (primed)...	1	—	1
MG752/105	Bonnet side hinge rod	2	—	2
MG753	**Bonnet complete** (primed)	—	1	—
MG753/100	Bonnet top O/S (primed)	—	1	—
MG753/101	„ „ N/S (primed)	—	1	—
MG752/102	Bonnet top hinge rod	—	1	—
MG752/106	Cover for ditto	—	1	—
MG752/103	Bonnet side O/S (primed)	—	1	—
MG752/104	„ „ N/S (primed)	—	1	—
MG752/105	Bonnet side hinge rod	—	2	—
S44/51	Support for bonnet hinge rod (rear)	1	1	1
S75/20	Rubber for ditto	1	1	1
S75/19	Rubber protectors for bonnet corners	4	4	4
MG516/1	**Bonnet fastener with handle O/S**	2	2	2
MG516/2	**„ „ „ „ N/S**	2	2	2
A584	Bonnet fastener (less handle)	4	4	4
MG516/100	Handle for bonnet fastener O/S	2	2	2
MG516/101	„ „ „ „ N/S	2	2	2
MG707/100	Bracket for bonnet fastener	4	4	4
S36/10	Bonnet rest rubber (42″ long)	2	2	2
S75/35	Rubber buffer for bonnet	4	4	4

ALTERATIONS

.....

.....

.....

.....

.....

.....

FRONT SPLASHER (illustration on page 48)

S115/5	Front splasher (primed)	1	1	1
S107/9	Piping for ditto	2	2	2
S33/74	Bolt for front splasher	4	4	4
S27/45	Rubber ferrule between splasher and radiator ...	2	2	2

Part No.	DESCRIPTION	No. Used Saloon	Tourer	Foursome

ALTERATIONS

.....

.....

.....

.....

.....

.....

BADGE BAR (illustration on page 53)

MG754	**Badge bar**	1	1	1
S46/16	End bracket for ditto	2	2	2
S33/72	Pinch bolt for ditto	2	2	2

ALTERATIONS

.....

.....

.....

.....

.....

.....

BUMPERS (illustration on page 53)

MG757	**Front bumper complete**	1	1	1
MG757/100	Front bumper bar	1	1	1
MG757/101	Top cap and stud for bumper bar ends ...	2	2	2
MG666/102	Weight for ditto (top)	2	2	2
MG666/104	„ „ „ (bottom)...	2	2	2
MG666/103	Rubber washer for ditto	2	2	2
MG666/105	Bottom cap for ditto	2	2	2
MG757/102	Main spring for front bumper	1	1	1
MG757/103	Packing piece for silentbloc	2	2	2
S17/18	Silentbloc for front bumper	2	2	2
MG757/104	Cover for ditto	2	2	2
MG757/105	" U " clip for ditto	2	2	2
MG666/113	Buffer for front bumper	2	2	2
MG666/114	Cup for ditto	2	2	2
S89/25	Fixing stud for front bumper	2	2	2
S38/12	Dome nut for ditto	2	2	2
S68/4	Ferrule for front bumper stud	2	2	2
S75/33	Rubber washer for front bumper stud Comm. Ch. No. VA0904	2	2	2
MG758	**Rear bumper complete**	1	1	1
MG758/100	Rear bumper bar	1	1	1
MG709/102	Top cap and stud for bumper bar ends ...	2	2	2
MG709/103	Bottom cap for ditto	2	2	2
MG758/102	M.G. badge for rear bumper	1	1	1
MG758/101	Main spring for rear bumper	1	1	1
S66/19	Bracket for rear bumper	2	2	—
B275/119	„ „ „ „ O/S	—	—	1
B275/120	„ „ „ „ N/S	—	—	1
B275/121	Stay for ditto O/S	—	—	1
B275/122	„ „ „ N/S	—	—	1

ALTERATIONS

.....

.....

.....

.....

.....

.....

SPARE WHEEL CARRIER

MG789	**Spare wheel support tube complete**	1	—	1
S89/26	Steady for ditto	1	—	1
S45/7	Bracket for ditto	1	—	1
S50/1	Clamp for spare wheel support tube	1	—	1
S38/15	Nut for ditto	1	—	1
S98/19	Washer for ditto	1	—	1
S33/71	Special bolt for spare wheel support tube (bottom)	1	—	1
S27/56	Rubber ferrule for spare wheel support steady	1	—	1
S27/57	Rubber ferrule for spare wheel support tube (through wing)	1	—	1
S27/58	Ditto (bottom)	1	—	1
S54/8	Packing washer for spare wheel support (bottom)	2	—	2

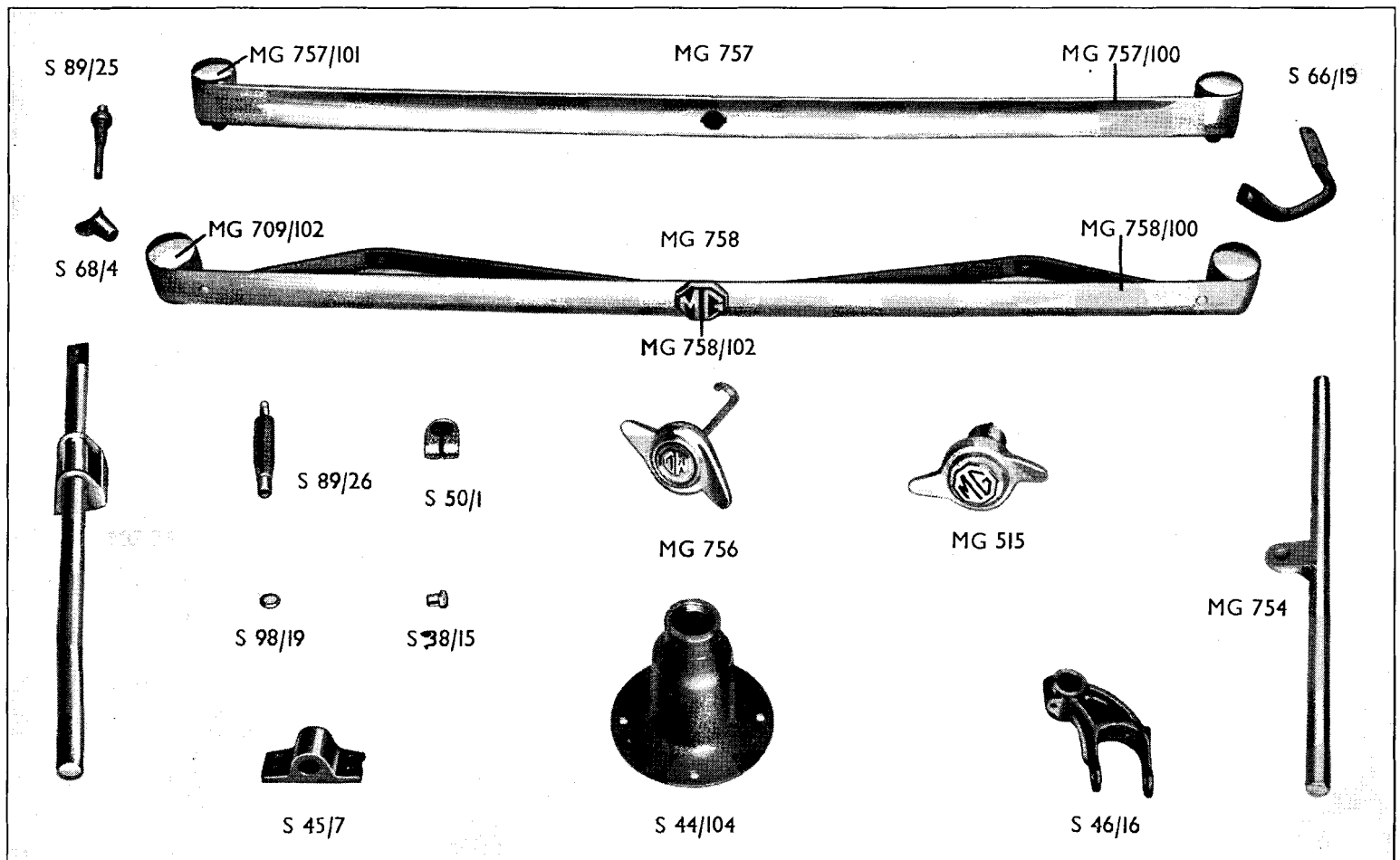
S 89/25
MG 757/101
MG 757
MG 757/100
S 66/19
S 68/4
MG 709/102
MG 758
MG 758/100
MG 758/102
S 89/26
S 50/1
MG 756
MG 515
MG 754
S 98/19
S 38/15
S 45/7
S 44/104
S 46/16

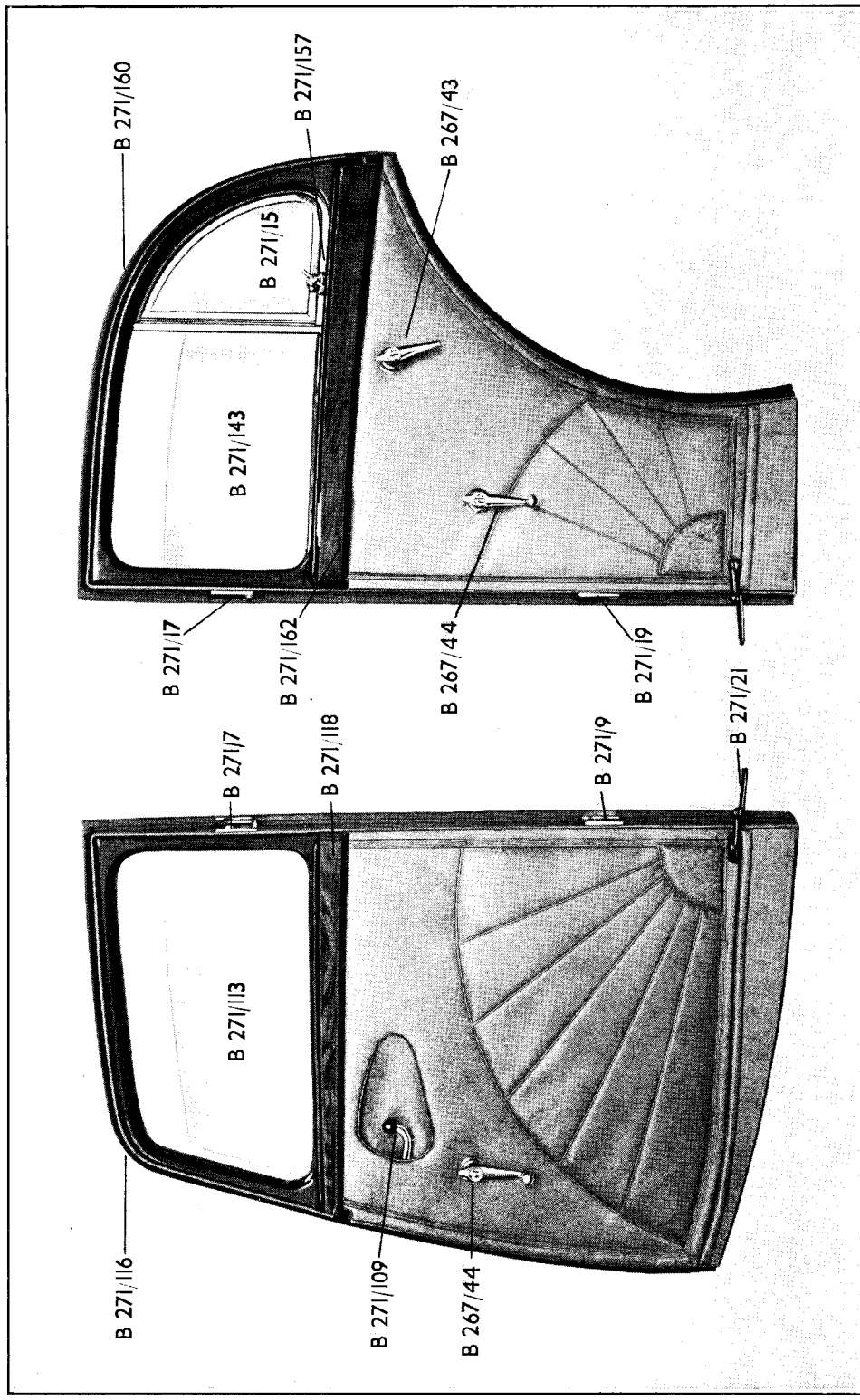
B 271/160
B 271/157
B 267/43
B 271/15
B 271/143
B 271/17
B 271/162
B 267/44
B 271/19
B 271/21
B 271/7
B 271/118
B 271/9
B 271/113
B 271/116
B 271/109
B 267/44

Part No.	DESCRIPTION	No. Used Saloon	Tourer	Foursome
MG756	**Spare wheel cap assembly** Ceased Ch. No. VA1161	1	—	1
MG788	" " " " Comm. Ch. No. VA1162	1	—	1
MG756/100	Spare wheel cap	1	—	1
MG756/101	M.G. medallion for ditto	1	—	1
MG756/102	Rod for ditto ... Ceased Ch. No. VA1161	1	—	1
MG788/100	" " " ... Comm. Ch. No. VA1162	1	—	1
S44/104	Spare wheel hub	—	1	—
B272/131	Packing block for ditto	—	1	—
MG515	**Spare wheel lock nut and sleeve assembly**	—	1	—
MG515/100	Spare wheel lock nut and sleeve	—	1	—
MG515/102	MG. medallion for ditto	—	1	—
MG515/103	Centralising shaft for ditto	—	1	—
MG515/104	Tension spring for ditto	—	1	—
MG515/101	Collar for ditto	—	1	—

ALTERATIONS

.....

.....

.....

.....

.....

.....

GEARBOX REMOTE CONTROL COVER AND FOOTWELL

S102/6	Gearbox and remote control cover	1	1	1
S102/9	Cover-plate for clutch inspection aperture Comm. Ch. No. VA1254	1	1	1
S44/84	Support bracket for gearbox and remote control cover (front)	1	1	1
S44/85	Ditto (rear)	1	1	1
S33/70	Special bolt for gearbox remote control cover ...	2	2	2
S75/31	Rubber washer for ditto	2	2	2
S55/23	Retainer for ditto	2	2	2
S68/34	Rubber ferrule for gearbox oil filler and dipstick (in cover)	2	2	2
S68/32	Rubber ferrule for gearbox remote control (in cover)	1	1	1
S103/12	Foot ramp (O/S portion)	1	1	1
S102/5	Rear footwell Ceased Ch. No. VA0947 (Saloon and Foursome) and Ch. No. VA0801 (Tourer)	1	1	1
S102/7	Ditto Comm. Ch. No. VA0948 (Saloon and Foursome) and Ch. No. VA0802 (Tourer)	1	1	1
S23/29	Rubber strip for ditto	1	1	1
S44/100	Support bracket for rear footwell O/S } Ceased Ch. No. VA0947 (Saloon and Foursome)	1	1	1
S44/101	Ditto N/S ... } and Ch. No. VA0801 (Tourer)	1	1	1

ALTERATIONS

.....

.....

.....

.....

.....

.....

SALOON BODY DETAILS

FRONT DOORS, LOCKS AND HANDLES (illustration on page 54)

			Saloon
B271/28	Front door lock O/S (with striker assembly) ...	Ceased Body No. 847/**6100**	1
B271/29	" " " N/S (with striker assembly) ...		1
B271/15	Striker assembly for front door lock		2
S17/23	Rubber bush for ditto		2
B271/132	Cover-plate for front door lock striker ...		2
B271/39	Front door lock O/S (with striker assembly) ...	Comm. Body No. 850/**8646**	1
B271/40	" " " N/S (with striker assembly) ...		1
B271/43	Striker assembly for front door lock O/S		1
B271/44	" " " " " " N/S		1
S17/21	Rubber bush for ditto		2
B271/302	Cover-plate for front door lock striker ...		2
B271/275	Cover-plate for front door lock O/S } Comm. Body No. 390/**5711**		1
B271/278	" " " " " N/S } Ceased Body No. 847/**6100**		1

Part No.	DESCRIPTION		No. Used Saloon
B271/105	Window regulator (front door O/S)		1
B271/106	„ „ (front door N/S)		1
B271/108	Bottom channel for window regulator (front door)		2
B267/44	Handle for window regulator with escutcheon, bush and pin		2
B267/110	Escutcheon for ditto		2
B267/397	Bush for ditto		2
B267/398	Pin for ditto		2
B271/109	Knob for door lock inside handle		2
B271/6	Front door handle (outside) O/S (with locking barrel and key)	Ceased Body	1
B271/52	Ditto N/S (with escutcheon)	No.847/**6100**	1
B271/122	Escutcheon for ditto		1
B271/55	Front door handle (outside) O/S (with locking barrel and key)	Comm. Body	1
B271/56	Ditto N/S (with escutcheon)	No. 850/**8646**	1
B271/289	Escutcheon for ditto		1
A1063	Locking barrel for front door handle O/S with key		1
A894/100	Key for ditto		1
B271/112	Fibre washer for outside door handle...		2
B271/113	Front door glass		2
B267/117	Channel for ditto (side)...		4
B271/114	„ „ „ (top)		2
B271/115	Glazing rubber for front door glass		2
B269/184	Rubber buffer for front door glass		2
B271/116	Front door capping (opening) O/S		1
B271/117	„ „ „ (opening) N/S		1
B271/118	Front door garnish rail O/S	Ceased Body	1
B271/119	„ „ „ „ N/S	No. 847/**6100**	1
B271/292	„ „ „ „ O/S	Comm. Body	1
B271/293	„ „ „ „ N/S	No. 850/**8646**	1
B271/120	Sealing rubber for front door		2
B271/121	Retainer for ditto		2

ALTERATIONS

.....

.....

.....

.....

.....

.....

.....

.....

.....

.....

.....

.....

REAR DOORS, LOCKS AND HANDLES (illustration on page 54)

B271/30	Rear door lock O/S (with striker assembly) ...		1
B271/31	„ „ „ N/S (with striker assembly) ...	Ceased Body	1
B267/27	Striker assembly for rear door lock	No. 847/**6100**	2
B271/178	Cover-plate for rear door lock striker O/S ...		1
B271/179	„ „ „ „ „ „ N/S ...		1
B271/41	Rear door lock O/S (with striker assembly) ...		1
B271/42	„ „ „ N/S (with striker assembly) ...		1
B271/44	Striker assembly for rear door lock O/S	Comm. Body	1
B271/43	„ „ „ „ „ „ N/S	No. 850/**8646**	1
B271/303	Cover-plate for rear door lock striker O/S ...		1
B271/304	„ „ „ „ „ „ N/S ...		1
S17/21	Rubber bush for striker		2
B271/276	Door lock cover-plate O/S	Comm. Body No. 390/**5711**	1
B271/277	„ „ „ N/S	Ceased Body No. 847/**6100**	1
B271/137	Window regulator (rear door O/S)		1
B271/138	„ „ (rear door N/S)		1
B271/139	Channel for window regulator (rear door O/S)		1
B271/140	„ „ „ „ (rear door N/S)		1
B267/44	Handle for window regulator with escutcheon, bush and pin		2
B267/110	Escutcheon for ditto		2
B267/397	Bush for ditto		2
B267/398	Pin for ditto		2
B267/43	Rear door handle (inside) with escutcheon bush and pin		2
B267/110	Escutcheon for ditto		2
B267/397	Bush for ditto		2
B267/398	Pin for ditto		2

Part No.	DESCRIPTION		No. Used Saloon
B271/53	Rear door handle (outside) O/S (with escutcheon)	Ceased Body No. 847/**6100**	1
B271/54	„ „ „ (outside) N/S (with escutcheon)		1
B271/122	Escutcheon for ditto		2
B271/57	Rear door handle (outside) O/S (with escutcheon)	Comm. Body No. 850/**8646**	1
B271/58	„ „ „ „ N/S (with escutcheon)		1
B271/289	Escutcheon for ditto		2
B271/112	Fibre washer for outside door handle...		2
B271/143	Rear door glass		2
B267/117	Channel for ditto (side)		2
B271/144	„ „ „ (top)		2
B271/145	Glazing rubber for rear door glass		2
B271/15	Rear door ventilator complete O/S		1
B271/16	„ „ „ „ N/S		1
B271/146	Frame for rear door ventilator O/S		1
B271/147	„ „ „ „ „ N/S		1
B271/148	Glass for rear door ventilator		2
B271/47	Centre channel for ditto (with brackets) O/S		1
B271/48	„ „ „ „ (with brackets) N/S		1
B271/153	Hinge for rear door ventilator O/S		1
B271/154	„ „ „ „ „ N/S		1
B271/155	Run rubber for rear door ventilator centre channel		2
B271/156	Draught rubber for rear door ventilator		2
B271/157	Adjuster for rear door ventilator		2
B271/158	Moulding for rear door ventilator O/S		1
B271/159	„ „ „ „ „ N/S		1
B271/160	Rear door capping (opening) O/S		1
B271/161	„ „ „ (opening) N/S		1
B271/162	Rear door garnish rail O/S	Ceased Body No. 847/**6100**	1
B271/163	„ „ „ „ N/S		1
B271/294	„ „ „ „ O/S	Comm. Body No. 850/**8646**	1
B271/295	„ „ „ „ N/S		1
B267/294	Rear door sealing rubber (wheel arch)		2
B267/295	Retainer for ditto		2
B271/164	Rear door sealing rubber (top)...		2
B271/165	Retainer for ditto		2

ALTERATIONS

.....

.....

.....

.....

.....

.....

.....

.....

.....

.....

.....

.....

DOOR HINGES, CHECKS AND TREAD PLATES (illustration on page 54)

B271/7	Front door hinge (top O/S) complete	Ceased Body No. 847/**6100**	1
B271/8	„ „ „ (top N/S) complete		1
B271/9	„ „ „ (bottom O/S) complete ...		1
B271/10	„ „ „ (bottom N/S) complete ...		1
B271/17	Rear door hinge (top O/S) complete		1
B271/18	„ „ „ (top N/S) complete		1
B271/19	„ „ „ (bottom O/S) complete		1
B271/20	„ „ „ (bottom N/S) complete		1
B271/125	Door hinge pin		8
S1/20	Greaser for door hinge		8
B271/128	Fixing bolt for door hinge		4
B271/129	Sleeve bolt for door hinge		4
B271/59	Door hinge (top) complete	Comm. Body No. 850/**8646**	2
B271/60	„ „ (bottom) complete		2
B271/286	Door hinge pin		4
B271/287	Nut for ditto		4
S1/27	Greaser for door hinge		4
B271/21	Door check and centre pillar bottom plate assembly O/S	Ceased Body No. 847/**6100**	1
B271/22	Ditto N/S		1
B271/171	Door check plate and links (front N/S, rear O/S)		2
B271/172	„ „ „ „ „ (front O/S, rear N/S)		2

Part No.	DESCRIPTION		No. Used Saloon
B271/173	Centre pillar bottom plate O/S		1
B271/174	" " " " N/S		1
B271/61	Door check and centre pillar bottom plate assembly O/S	Comm. Body No. 850/**8646**	1
B271/62	Ditto N/S		1
B271/290	Door check plate and links (front N/S, rear O/S)		1
B271/291	" " " " " (front O/S, rear N/S)		1
B271/175	Securing screw for door check		4
B271/176	Wave washer for ditto		8
B271/177	Securing bolt for centre pillar		4
B271/130	Front door tread plate O/S		1
B271/131	" " " " N/S		1
B271/170	Rear door tread plate		2

ALTERATIONS

.....

.....

.....

.....

.....

.....

.....

.....

.....

.....

.....

SEATS AND CUSHIONS (illustration on page 59)

B271/23	Front bucket seat O/S complete (less cushion) ...	Ceased Body No. 455/**5710**	1
B271/24	" " " N/S complete (less cushion) ...		1
B271/180	Front bucket seat pan O/S (trimmed) ...		1
B271/181	" " " " N/S (trimmed) ...		1
B271/182	Front bucket seat back panel (trimmed) ...		2
B267/187	Pivot for front bucket seat back panel O/S		2
B267/188	" " " " " " " N/S		2
B267/349	Seat slide channel (with locking lever) (on seat)		2
B267/190	" " " (plain) (on seat)		2
B271/184	Cushion for front bucket seat O/S (trimmed)		1
B271/185	" " " " " N/S (trimmed)		1
B267/194	Roller channel for seat slide (plain) (on floor)		2
B267/195	" " " " " (locking) (on floor)		2
B271/49	Front bucket seat complete (less cushion)... ...	Comm. Body No. 390/**5711**	2
B271/267	Front bucket seat pan (trimmed)		2
B271/268	Front bucket seat back panel (trimmed) ...		2
B267/187	Pivot for front bucket seat back panel O/S		2
B267/188	" " " " " " " N/S		2
B271/269	Seat slide channel (with locking lever) (on seat)		2
B271/270	" " " (plain) (on seat)		2
B271/271	Cushion for front bucket seat (trimmed) ...		2
B271/272	Roller channel for seat slides (plain) (on floor)		2
B271/273	" " " " " (locking) (on floor)		2
B271/186	Rear seat pan	Ceased Body No. 455/**5710**	1
B271/188	Rear seat squab (trimmed)		1
B271/248	Rear seat pan	Comm. Body No. 390/**5711**	1
B271/250	Rear seat squab (trimmed)		1
B271/187	Rear seat cushion (trimmed) ... ... Ceased Body No. 455/**5710**		1
B271/249	Ditto (trimmed) Comm. Body No. 390/**5711**. Ceased Body No. 847/**6100**		1
B271/301	Ditto (trimmed) ... ... Comm. Body No. 850/**8646**		1

ALTERATIONS

.....

.....

.....

.....

.....

.....

.....

.....

.....

.....

.....

.....

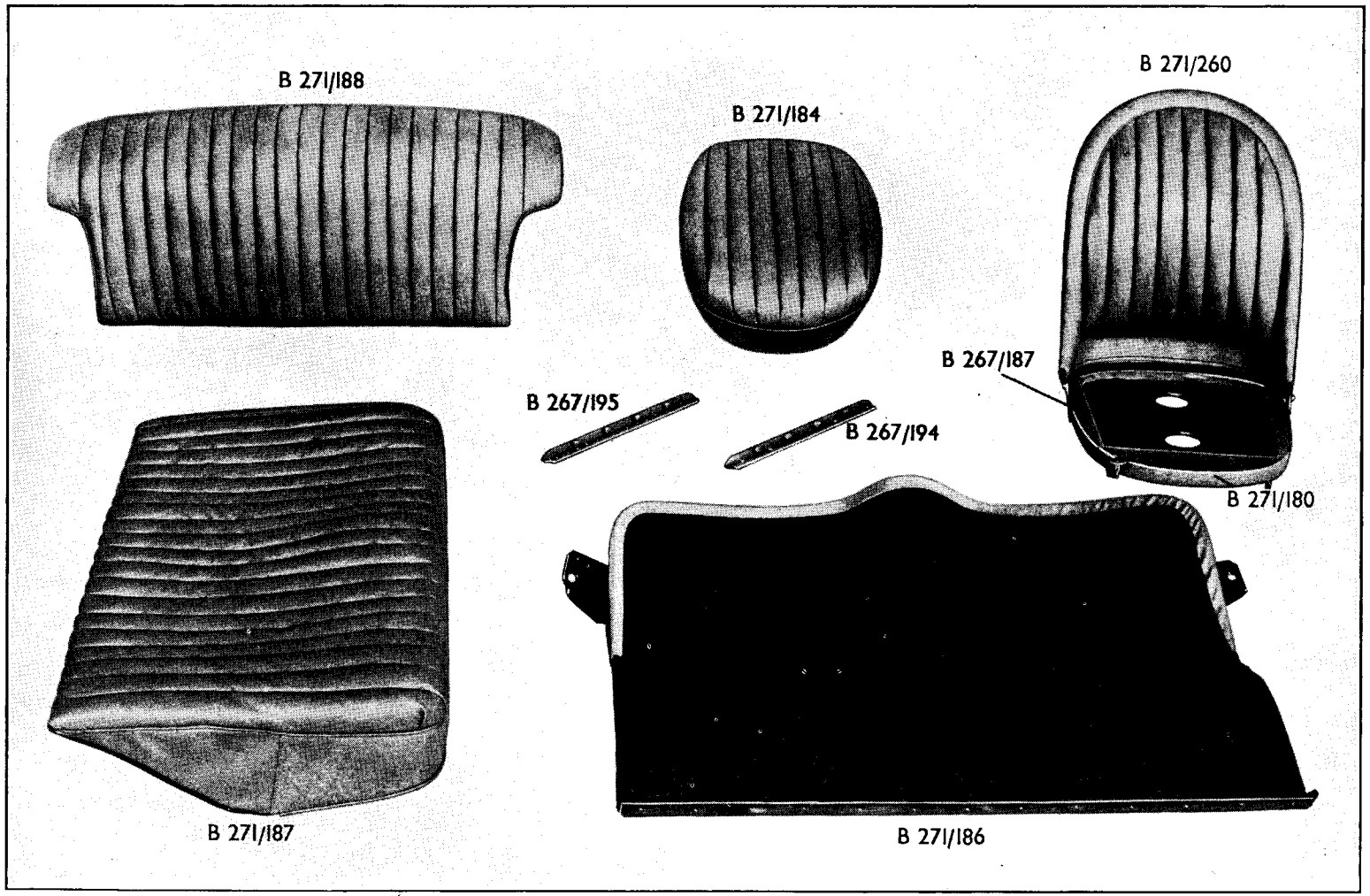
B 271/188
B 271/184
B 271/260
B 267/187
B 267/195
B 267/194
B 271/180
B 271/187
B 271/186

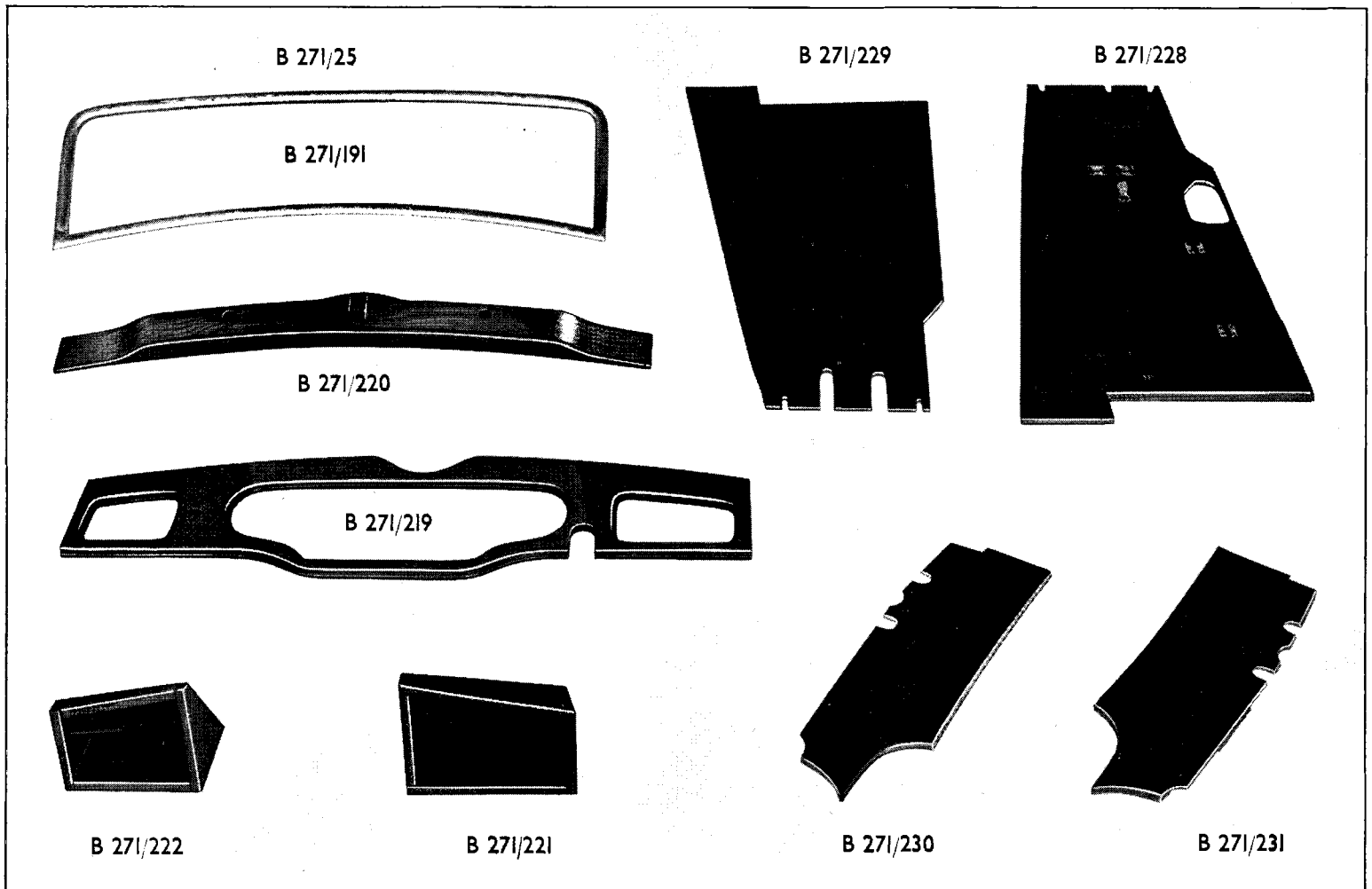
B 271/25
B 271/191
B 271/229
B 271/228
B 271/220
B 271/219
B 271/222
B 271/221
B 271/230
B 271/231

Part No.	DESCRIPTION		No. Used Saloon
	FLOORBOARDS AND CARPETS (illustration on page 60)		
B271/228	Floorboards (large) O/S	Ceased Ch. No. VA0947	1
B271/229	„ (large) N/S		1
B271/261	„ (large) O/S	Comm. Ch. No. VA0948	1
B271/262	„ (large) N/S		1
B271/230	„ (small) O/S		1
B271/231	„ (small) N/S		1
B271/232	Carpet (front) O/S		1
B271/233	„ (front) N/S		1
B271/234	„ (on gearbox cover)		1
B271/235	„ (on propeller shaft tunnel)	Ceased Ch. No. VA0947	1
B271/236	„ (centre) O/S		1
B271/237	„ (centre) N/S		1
B271/238	„ (rear) O/S...		1
B271/239	„ (rear) N/S		1
B271/274	„ (on propeller shaft tunnel)	Comm. Ch. No. VA0948	1
B271/263	„ (centre) O/S		1
B271/264	„ (centre) N/S		1
B271/265	„ (rear) O/S		1
B271/266	„ (rear) N/S		1
			1

ALTERATIONS

.....

.....

.....

.....

.....

.....

	WINDSCREEN AND REAR LIGHT (illustration on page 60)		
B271/25	**Windscreen (complete with glass)**		1
B271/189	Windscreen frame		1
B271/190	Hinge for ditto		2
B271/191	Windscreen glass		1
S23/5	Glazing rubber for ditto...		1
B271/193	Windscreen aperture rubber (top and sides)		1
B271/194	„ „ „ (bottom)		1
B271/195	Retainer for ditto (top)		1
B271/196	„ „ „ O/S		1
B271/197	„ „ „ N/S		1
B271/198	„ „ „ (bottom)		1
B271/26	Windscreen winder complete		1
B271/200	Bracket (windscreen winder chain to screen)		1
B271/199	Back plate for windscreen winder	Ceased Body No. 847/**6100**	1
B271/296	„ „ „ „ „	Comm. Body No. 850/**8646**	1
B271/297	Bracket for ditto		2
B271/201	Rear light glass		1
B271/202	Channel for ditto		1

ALTERATIONS

.....

.....

.....

.....

.....

.....

	SLIDING ROOF AND DRIP BEADING	
B271/214	Handle for sliding roof	1
B267/303	Screw for ditto	1
B271/215	Fillet for sliding roof (sides)	2
B271/216	„ „ „ „ (front and rear)	2
B271/217	Drip beading O/S	1
B271/218	„ „ N/S	1

ALTERATIONS

.....

.....

.....

.....

.....

.....

Part No.	DESCRIPTION	No. Used Saloon

BOOT LID

B271/203	Boot lid panel (less fittings)	1
B271/204	Hinge and stay for boot lid O/S	1
B271/205	" " " " " " N/S	1
B271/206	Lock for boot lid	1
B271/207	Plate for boot lid lock	1
B271/32	Handle for boot lid with locking barrel and keys (Quote type letters and number when ordering)	1
A1066	Locking barrel for boot lid handle with key	1
A894/100	Key for ditto	1
B271/245	Circlip for boot lid handle	1
B271/209	Tool lid	1
S25/2	Hinge for ditto	3
B271/27	Tool lid catch complete (top and bottom portions)	2
B271/210	Body portion of tool lid catch	2
B271/211	Lid portion of tool lid catch	2
B267/283	Boot lid strap staple (in boot)	2
B271/213	" " " " (on boot lid)	2
B271/212	Sealing rubber for boot lid	1
S103/13	Cover for petrol filler (in boot)	1

ALTERATIONS

.....

.....

.....

.....

.....

.....

FACIA BOARD

B271/219	Facia board	...Ceased Body No. 455/**5710**	1
B271/251	" "	...Comm. Body No. 390/**5711**	
		Ceased Body No. 709/**5950**	1
B271/298	" "	...Comm. Body No. 693/**5951**	
		Ceased Body No. 847/**6100**	1
B271/299	" "	...Comm. Body No. 850/**8646**	1
B271/220	Facia board capping	...Ceased Body No. 847/**6100**	1
B271/300	" " "	...Comm. Body No. 850/**8646**	1
B271/221	Glove pocket O/S		1
B271/222	" " N/S		1

ALTERATIONS

.....

.....

.....

.....

.....

.....

METAL DASH AND SCUTTLE VENTILATORS

B271/100	Metal dash	1
B271/33	Scuttle ventilator complete O/S	1
B271/34	" " " N/S	1
B271/242	Operating lever for scuttle ventilator	2
B271/243	Cover for scuttle ventilator O/S	1
B271/244	" " " " N/S	1
B271/226	Rubber for scuttle ventilator	2

ALTERATIONS

.....

.....

.....

.....

.....

.....

BODY INTERIOR FITTINGS

A1045	Roof-lamp complete	1
A1045/100	Glass for roof-lamp	1
S20/8	Bulb for roof-lamp	1
A889	Switch for roof-lamp	1
B267/259	Rear blind	1
B267/260	Pulley for blind cord	2
B267/261	Operating slide for rear blind	1

Part No.	DESCRIPTION	No. Used Saloon
A1046	Ash tray	4
A887	Trafficators	2
S20/20	Bulb for Trafficators	2
A1039	Sun visor complete (fawn)	1
A1040	„ „ „ (blue)	1
A1039/100	Sun visor shield (fawn)	1
A1040/100	„ „ „ (blue)	1
A1039/101	Bracket for sun visor	1

ALTERATIONS

.....

.....

.....

.....

.....

.....

FOURSOME BODY DETAILS

DOORS, LOCKS, HANDLES AND HINGES

			Foursome
B274/1	Door lock O/S (with striker)		1
B274/2	„ „ N/S (with striker)		1
B274/104	Striker for door lock		2
B274/105	Door handle (outside) O/S	With N/S locking handles	1
B274/3	Door handle (outside) N/S with locking barrel and key	With N/S locking handles	1
B275/4	Ditto (outside) O/S with locking barrel and key	With O/S locking handle (oblong escutcheon)	1
B275/5	Ditto (outside) N/S	With O/S locking handle (oblong escutcheon)	1
B275/6	Door handle (outside) O/S with locking barrel and key	With O/S locking handle (octagonal escutcheon)	1
B275/7	Ditto (outside) N/S	With O/S locking handle (octagonal escutcheon)	1
B271/122	Escutcheon for ditto	With O/S locking handle (octagonal escutcheon)	1
B271/112	Fibre washer for ditto	With O/S locking handle (octagonal escutcheon)	1
A1063	Locking barrel for door handle (with keys)		1
A894/100	Key for ditto		1
B274/8	Door handle (inside) (plain)		2
B267/43	„ „ (inside) (with M.G. monogram)		2
B267/110	Escutcheon for ditto		2
B267/397	Bush for ditto		2
B267/398	Pin for ditto		2
B274/106	Window winder handle		2
B275/103	Door glass		2
B275/104	Channel for ditto (front) O/S		2
B275/126	„ „ „ (front) N/S		1
B275/105	„ „ „ (rear) (hinged) O/S		2
B275/127	„ „ „ (rear) (hinged) N/S		1
B275/106	Door hinge (top) O/S		1
B275/107	„ „ (top) N/S		1
B275/108	„ „ (centre) O/S		1
B275/109	„ „ (centre) N/S		1
B275/110	„ „ (bottom) O/S		1
B275/111	„ „ (bottom) N/S		1
B274/116	Door check strap		2
B274/117	Cover for ditto		4
B274/118	Door pull		2
B274/119	Staple for ditto		4
B274/122	Door buffer (top)		2
B274/123	„ „ (bottom)		2
B274/124	Shoe for ditto		2
B274/125	Catch plate for ditto		2

ALTERATIONS

.....

.....

.....

.....

.....

.....

.....

.....

.....

.....

.....

Part No.	DESCRIPTION	No. Used
		Foursome
	FACIA, WINDSCREEN AND HOOD	
B275/114	Facia board	1
A1107	Ash tray on facia	1
B275/112	Windscreen frame	1
B275/1	Windscreen adjuster assembly O/S	1
B275/2	" " " N/S	1
B275/113	Windscreen glass	1
B274/128	Hood side support O/S	1
B274/129	" " " N/S	1
B274/157	Nut for ditto	2
B274/132	Hood to screen wing nut	2

ALTERATIONS

.....

.....

.....

.....

.....

.....

	SEATS	
B274/137	Seat slide (on seat) (plain)	2
B274/138	" " (on seat) (locking)	2
B274/139	" " (on floor) (plain)	2
B274/140	" " (on floor) (locking)	2

ALTERATIONS

.....

.....

.....

.....

.....

.....

	LUGGAGE BOOT	
B275/115	Hinged stay for boot lid O/S	1
B275/116	" " " " " N/S	1
B274/7	Handle for boot lid with locking barrel and key Ceased	1
B271/32	Ditto Comm.	1
A1066	Locking barrel for boot lid handle with key	1
A894/100	Key for ditto	1
B275/117	Lock for boot lid Ceased	1
B271/206	" " " " Comm.	1
B271/27	Tool lid catch assembly	2
B271/210	Body portion of tool lid catch	2
B271/211	Lid portion of tool lid catch	2
B274/147	Buffer for boot lid	2
B275/118	Cover for petrol filler	1

ALTERATIONS

.....

.....

.....

.....

.....

.....

TOURER BODY DETAILS (illustration on page 67)

	DOORS, LOCKS, HANDLES AND HINGES	Tourer
B254/10	Door lock (complete with catch plate) O/S	1
B254/11	" " (complete with catch plate) N/S	1
B254/12	Door lock catch plate complete	2
B254/198	Brass washer for catch plate	2
B254/199	Cup washer for catch plate	2
B254/200	Dome nut for catch plate	2
S17/10	Bush for catch plate	2
B254/183	Securing bracket for catch plate	2
B251/105	Door handle O/S	1
B251/106	" " N/S	1
B272/3	Door hinge (top O/S) complete	1
B272/4	" " (top N/S) complete	1
B272/5	" " (bottom O/S) complete	1
B272/6	" " (bottom N/S) complete	1
B272/104	Hinge pin	4

Part No.	DESCRIPTION	No. Used Tourer
B267/324	Tab washer for ditto	4
B272/105	Door check plate and links O/S	1
B272/106	" " " " " N/S	1
B271/175	Securing screw for ditto	2
B271/176	Wave washer for ditto	2
B269/177	Fixing stud and plate for side curtain	4
B269/178	Securing clamp for side curtain	4
B272/109	Door tread plate O/S	1
B272/110	" " " N/S	1
B254/133	Door buffer	4

ALTERATIONS

.....

.....

.....

.....

.....

.....

.....

.....

.....

.....

.....

SEATS AND CUSHIONS

B272/15	Front bucket seat O/S complete (less cushion)		1
B272/16	" " " N/S complete (less cushion)		1
B272/144	Front bucket seat pan O/S		1
B272/145	" " " " N/S		1
B272/146	Front bucket seat back panel O/S		1
B272/147	" " " " " N/S		1
B267/187	Pivot for front bucket seat back panel O/S		2
B267/188	" " " " " " " N/S		2
B267/189	Seat slide channel (with locking lever) (on seat)		2
B267/190	" " " (plain) (on seat)		2
B272/154	Cushion for front bucket seat O/S		1
B272/155	" " " " " N/S		1
B267/194	Roller channel for seat slides (plain) (on floor)		2
B267/195	" " " " " (locking) (on floor)		2
B272/156	Rear seat pan	Ceased Body No. 193/**6200**	1
B272/148	Rear seat cushion	Ceased Body No. 193/**6200**	1
B272/149	Rear seat squab	Ceased Body No. 193/**6200**	1
B272/171	Rear seat pan	Comm. Body No. 200/**7691**	1
B272/172	Rear seat cushion	Comm. Body No. 200/**7691**	1
B272/173	Rear seat squab	Comm. Body No. 200/**7691**	1

ALTERATIONS

.....

.....

.....

.....

.....

.....

.....

.....

.....

.....

.....

WINDSCREEN (illustration on page 67)

B272/7	**Windscreen (complete with glass)** ...	Ceased Body No. 193/**6200**	1
B272/8	Windscreen frame complete (less glass)	Ceased Body No. 193/**6200**	1
B272/115	Windscreen frame (bare) ...	Ceased Body No. 193/**6200**	1
B272/17	**Windscreen (complete with glass)** ...	Comm. Body No. 200/**7691**	1
B272/18	Windscreen frame complete (less glass)	Comm. Body No. 200/**7691**	1
B272/177	Windscreen frame (bare) ...	Comm. Body No. 200/**7691**	1
B272/116	Windscreen side support (bottom O/S)		1
B272/117	" " " (bottom N/S)		1
B272/118	" " " (top O/S)	Ceased Body No. 193/**6200**	1
B272/119	" " " (top N/S)	Ceased Body No. 193/**6200**	1
B272/178	" " " (top O/S)	Comm. Body No. 200/**7691**	1
B272/179	" " " (top N/S)	Comm. Body No. 200/**7691**	1
B251/131	Wing nut for windscreen		2
B254/149	Washer for ditto		2

Part No.	DESCRIPTION	No. Used Tourer
B251/192	Dome nut for windscreen	2
B251/198	Washer for ditto	2
B272/159	Windscreen glass ... ...Ceased Body No. 193/**6200**	1
B272/180	„ „ ... ...Comm. Body No. 200/**7691**	1
S23/5	Glazing rubber for ditto...	1
B272/120	Rubber moulding for windscreen side supports (bottom)	2
B272/121	Bolt for securing windscreen	6
B272/186	Windscreen draught excluder O/S } Comm. Body No. 382/**7891**	1
B272/187	„ „ „ N/S } Comm. Body No. 382/**7891**	1

ALTERATIONS

.....

.....

.....

.....

.....

.....

FACIA BOARD (illustration on page 67)

B272/112	Facia board ... ...Ceased Body No. 193/**6200**	1
B272/176	„ „ ... ...Comm. Body No. 200/**7691**	1
B272/157	Glove pocket O/S	1
B272/158	„ „ N/S	1

ALTERATIONS

.....

.....

.....

.....

.....

.....

.....

.....

.....

.....

.....

.....

FLOORBOARDS AND CARPETS

B271/228	Floorboard (large) O/S ... ... } Ceased Ch. No. VA0801	1
B271/229	„ (large) N/S ... ... } Ceased Ch. No. VA0801	1
B271/261	„ (large) O/S ... ... } Comm. Ch. No. VA0802	1
B271/262	„ (large) N/S ... ... } Comm. Ch. No. VA0802	1
B272/150	„ (small) O/S	1
B272/151	„ (small) N/S	1
B271/232	Carpet (front) O/S	1
B271/233	„ (front) N/S	1
B271/234	„ (on gearbox cover)	1
B271/235	„ (on propeller shaft tunnel) } Ceased Ch. No. VA0801	1
B271/236	„ (centre) O/S ... ... } Ceased Ch. No. VA0801	1
B271/237	„ (centre) N/S ... ... } Ceased Ch. No. VA0801	1
B272/152	„ (rear) O/S... ... ... } Ceased Ch. No. VA0801	1
B272/153	„ (rear) N/S ... ... } Ceased Ch. No. VA0801	1
B271/274	„ (on propeller shaft tunnel) } Comm. Ch. No. VA0802	1
B271/263	„ (centre) O/S ... ... } Comm. Ch. No. VA0802	1
B271/264	„ (centre) N/S ... ... } Comm. Ch. No. VA0802	1
B272/184	„ (rear) O/S... ... ... } Comm. Ch. No. VA0802	1
B272/185	„ (rear) N/S ... ... } Comm. Ch. No. VA0802	1

ALTERATIONS

.....

.....

.....

.....

.....

.....

METAL DASH, TOOLBOX AND SCUTTLE VENTILATORS

B272/113	Metal dash	1
B272/114	Toolbox	1
MG682/106	Lid for toolbox	1
A921	Fastener for ditto	2
B271/33	Scuttle ventilator complete O/S	1
B271/34	„ „ „ N/S	1
B271/242	Operating lever for scuttle ventilator	2
B271/243	Cover for scuttle ventilator O/S	1
B271/244	„ „ „ „ N/S	1

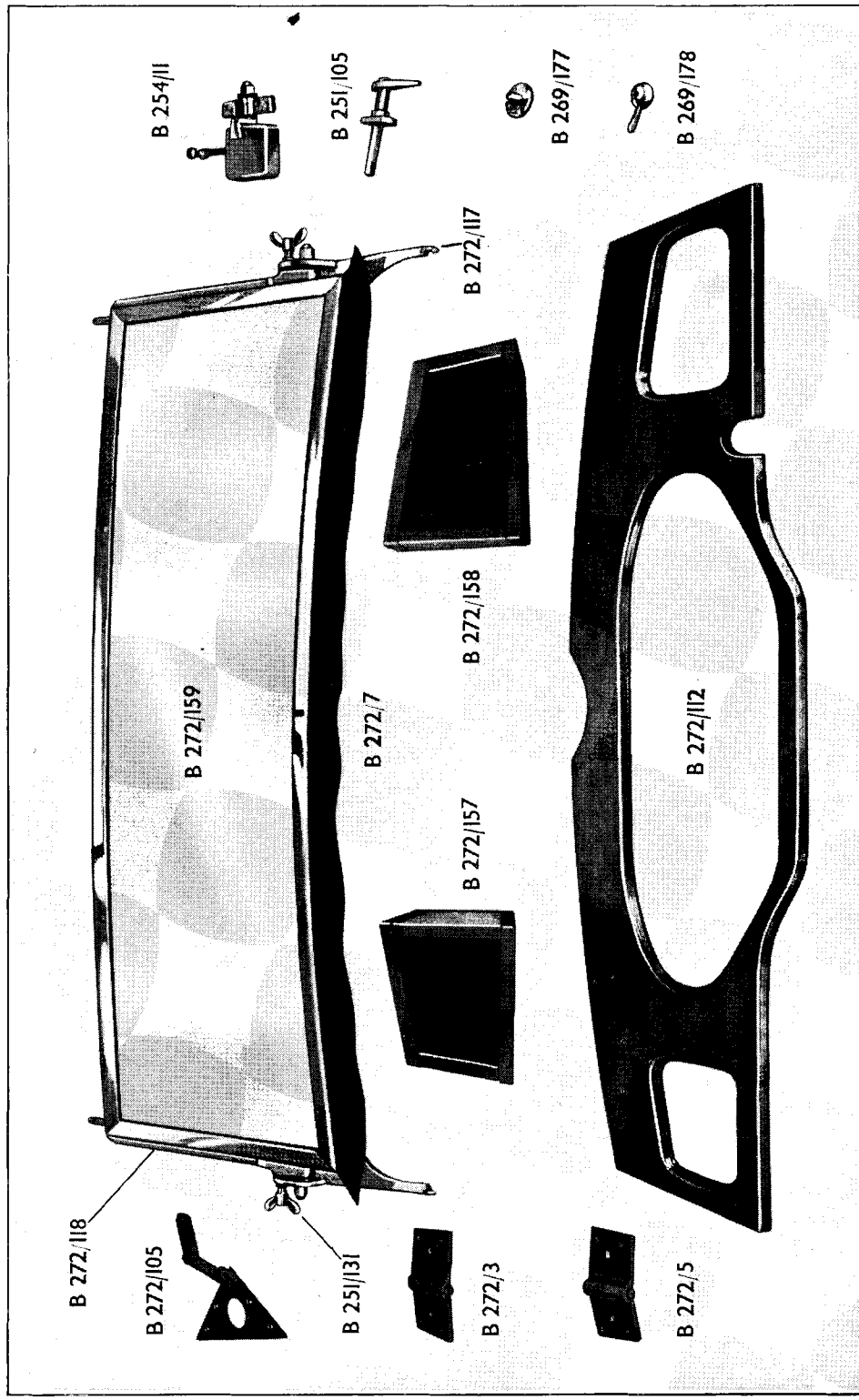
B 254/11
B 251/105
B 269/177
B 269/178
B 272/117
B 272/158
B 272/159
B 272/7
B 272/112
B 272/157
B 272/118
B 272/105
B 251/131
B 272/3
B 272/5

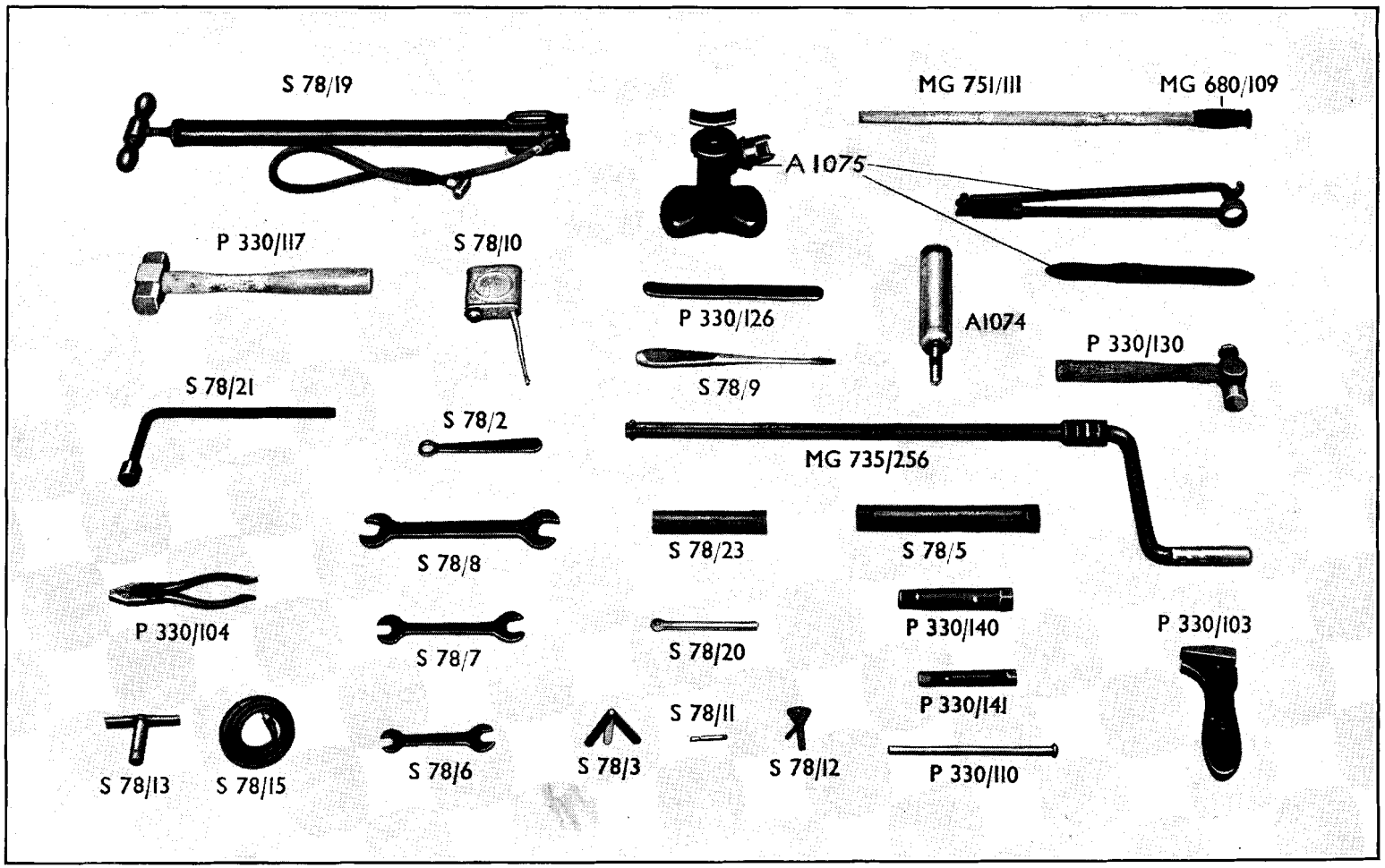
S 78/19
MG 751/111
MG 680/109
A 1075
P 330/117
S 78/10
P 330/126
A1074
P 330/130
S 78/9
S 78/21
S 78/2
MG 735/256
S 78/8
S 78/23
S 78/5
P 330/104
S 78/7
S 78/20
P 330/140
P 330/103
P 330/141
S 78/11
S 78/13
S 78/15
S 78/6
S 78/3
S 78/12
P 330/110

Part No.	DESCRIPTION	No. Used Tourer
B271/226	Rubber for scuttle ventilator	2

ALTERATIONS

.....
.....
.....
.....
.....
.....

HOOD AND SIDE CURTAINS

B272/9	**Hood complete**	Ceased Body No. 193/**6200**	1
B272/122	Hood frame complete		1
B272/123	Fulcrum bracket for ditto (on body) O/S		1
B272/124	" " " " (on body) N/S		1
B272/19	Hood complete	Comm. Body No. 200/**7691**	1
B272/181	Hood frame complete		1
B272/182	Fulcrum bracket for ditto (on body) O/S		1
B272/183	" " " " (on body) N/S		1
B272/125	Hood canopy		1
B272/165	Hood to screen bracket O/S		1
B272/166	" " " " N/S		1
B272/161	Clamp bolt (hood to screen)		2
B272/164	Moulding for front of hood		1
B272/126	Hood container		1
B272/11	**Front side curtain complete O/S**		1
B272/132	Frame for ditto (inside)		1
B272/136	" " " (outside) C.P.		1
B272/12	**Front side curtain complete N/S**		1
B272/133	Frame for ditto (inside)		1
B272/137	" " " (outside) C.P.		1
B272/13	**Rear side curtain complete O/S**		1
B272/138	Frame for ditto (inside)		1
B272/142	" " " (outside) C.P.		1
B272/14	**Rear side curtain complete N/S**		1
B272/139	Frame for ditto (inside)		1
B272/143	" " " (outside) C.P.		1
B272/160	Side curtain container		1
B269/177	Fixing stud and plate for rear side curtain		2
B269/178	Securing clamp for rear side curtain		2
B272/188	Buffer for side curtain	Comm. Body No. 382/**7891**	4
B272/189	Hood to screen rubber	Comm. Body No. 351/**7847**	1
B272/190	Retainer for ditto		1

ALTERATIONS

.....
.....
.....
.....
.....
.....
.....
.....
.....
.....
.....
.....

TOOL KIT

		Saloon	Tourer	Foursome
S78/2	Tappet spanner	1	1	1
S78/3	Tappet feeler gauge	1	1	1
S78/21	Spanner for cylinder head nuts	1	1	1
P330/141	Box spanner ($\frac{5}{16}'' \times \frac{1}{4}''$)	1	1	1
P330/140	" " ($\frac{5}{16}'' \times \frac{3}{8}''$)	1	1	1
S78/5	" " ($\frac{7}{16}'' \times \frac{1}{2}''$)	1	1	1
S78/23	Box spanner for sparking plugs	1	1	1
P330/110	Tommy bar	1	1	1
S78/6	Double-ended spanner ($\frac{3}{16}'' \times \frac{1}{4}''$)	1	1	1
S78/7	" " ($\frac{5}{16}'' \times \frac{3}{8}''$)	1	1	1
S78/8	" " ($\frac{7}{16}'' \times \frac{1}{2}''$)	1	1	1
P330/103	Adjustable hammer	1	1	1
P330/104	Pliers	1	1	1
S78/9	Screwdriver...	1	1	1
P330/130	Hammer	1	1	1

Part No.	DESCRIPTION	No. Used Saloon	Tourer	Foursome
P330/117	Copper-headed hammer	1	1	1
S78/10	Oilcan	1	1	1
A1074	Grease gun... ... Ceased Ch. No. VA1794	1	1	1
A1121	Grease gun... ... Comm. Ch. No. VA1795	1	1	1
S78/11	Tyre valve tool	1	1	1
S78/12	Distributor screwdriver with feeler gauge ...	1	1	1
S78/13	Wrench for Lockheed bleeder screw	1	1	1
S78/15	Tube and drain for Lockheed system (in tin)	1	1	1
S78/19	Tyre pump...	1	1	1
S78/20	Tyre pressure gauge	1	1	1
A1075	Jack (with handle)	1	1	1
MG735/256	Starting handle	1	1	1

ALTERATIONS

.....

.....

.....

.....

.....

.....

.....

.....

.....

.....

.....

.....

TOOL TRAYS AND CLIPS

S68/31	Tool tray	1	—	1
S68/23	„ „ O/S	—	1	—
S68/24	„ „ N/S	—	1	—
S44/114	Retainer for manual jack	1	—	1
S52/13	Clip (for manual jack)	—	1	—
S53/12	„ (for manual jack metal handle) (small) ...	1	1	1
S52/4	„ (for manual jack metal handle) (large) ...	1	1	1
S52/10	„ (for manual jack wooden handle or hydraulic jack handle)	2	2	2
S52/4	„ (for copper hammer)	2	2	2
S52/12	„ (for tyre pump) (large)	—	2	—
S52/10	„ (for tyre pump) (small)	—	1	—
S52/4	„ (for tyre pump handle)	—	1	—
S52/10	„ (for starting handle) (large)	—	2	—
S52/4	„ (for starting handle) (small)	—	1	—
S52/10	„ (for Lockheed wrench)	—	1	—
S52/4	„ (for grease gun)	—	1	—
S52/5	„ (for grease gun)	—	2	—

ALTERATIONS

.....

.....

.....

.....

.....

.....

.....

.....

.....

.....

.....

.....

Telephone :
251 (4 lines) Abingdon

Telegrams :
"Emgee," Abingdon

THE MG CAR
COMPANY LTD
ABINGDON-ON-THAMES

Chairman - - - - - - - VISCOUNT NUFFIELD
Vice-Chairman - - - - - - OLIVER BODEN, O.B.E.
Managing Director - - - - CECIL KIMBER, M.I.A.E.